OREGON CITY

DRAINAGE MASTER PLAN

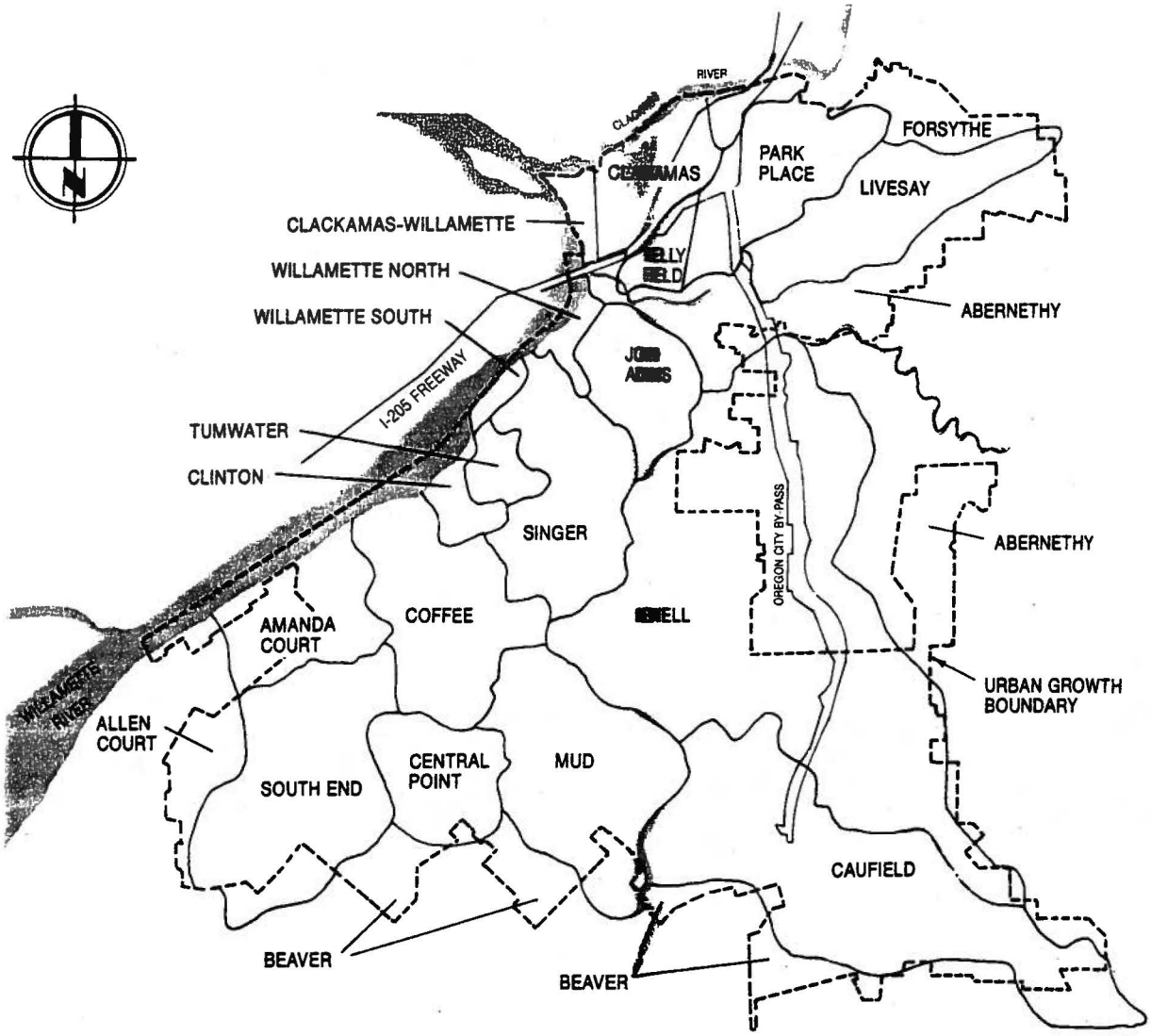

JANUARY, 1988

otak

APPENDIX A

DRAINAGE DESIGN PROCEDURES AND STANDARDS

Table of Contents

Section		Page
1.0	INTRODUCTION	
	1.1 Purpose	A-1
	1.2 Goals	A-1
	1.3 Standard Construction Specifications	A-2
	1.4 Definitions and Terms	A-2
2.0	POLICY	
	2.1 Applicability	A-7
	2.2 Engineering Policy	A-7
	2.3 Approval of Alternate Materials or Methods	A-8
3.0	DESIGN CONSIDERATIONS	
	3.1 General	A-8
	3.2 Storm Recurrence Intervals for Design of Drainage Improvements	A-10
	3.3 Peak Discharge	A-10
	3.4 Storage Detention Volume	A-11
4.0	STORM DRAIN REQUIREMENTS	
	4.1 Pipe Materials	A-12
	4.2 Size	A-13
	4.3 Manning's Coefficient	A-13
	4.4 Minimum Slope and Velocity	A-13
	4.5 Alignment	A-14
	4.6 Anchor Walls	A-14
	4.7 Cover Requirements	A-14
	4.8 Location	A-15
	4.9 Slope Intercept Drains	A-16
	4.10 Subsurface Drains	A-16
	4.11 Spacing of Storm Drainage Appurtenances	A-16
	4.12 Catch Basins and Cleanouts	A-17
	4.13 Manholes	A-17
	4.14 Curb and Gutter	A-17
	4.15 Surface Drainage	A-18
5.0	STORMWATER DETENTION	
	5.1 General Requirements	A-20

5.2 Additional Requirements for Open Detention Basins A-21
5.3 Easements A-23

6.0 EROSION AND SEDIMENT CONTROL

6.1 General A-24
6.2 Temporary Erosion/Sedimentation Control Plan A-25

7.0 REFERENCES A-26

8.0 STANDARD DRAWINGS A-27

:1500

1.0 INTRODUCTION

1.1 Purpose

The purpose of these Drainage Design Procedures and Standards (after this referred to as Standards) is to provide a consistent policy to guide construction of stormwater drainage systems in the City of Oregon City and the surrounding Urban Growth Area. Most of the elements contained in this document are Public Works oriented and most are related to the development or platting process; however, it is intended that they apply to both public and private work designated herein.

These Standards cannot provide for all situations. They are intended to assist but not to substitute for competent work by design professionals. It is expected that land surveyors, engineers and architects will bring to each project the best of skills from their respective disciplines.

The Standards are also not intended to limit unreasonably any innovative or creative effort which could result in better quality, better cost savings or both. Any proposed departure from the Standards will be judged, however, on the likelihood that such variance will produce a compensating or comparable result, in every way adequate for the user and City residents.

1.2 Goals

Following from the above purpose, the standards have the objective of developing a stormwater drainage system which will:

a. Be consistent with the Oregon City Drainage Master Plan for land drainage and flood control within the Oregon City Urban Growth Area, adopted by the City of Oregon City;

b. Be consistent with the City of Oregon City and Clackamas County Planning Ordinances and existing standards governing drainage management;

c. Be of adequate design to safely manage all volumes of water generated upstream and on the site to an approved point of disposal;

d. Provide points of disposal for stormwater generated by future development upstream;

e. Prevent the uncontrolled or irresponsible discharge of stormwater onto adjoining public or private property;

f. Prevent the capacity of downstream channels and storm drainage facilities from being exceeded;

g. Have sufficient structural strength to resist erosion and all external loads which may be imposed.

h. Regulate filling and encroachment on drainage channels to retain capacity to convey present and potential future peak discharges;

i. Maximize efficient use of the natural drainage system of streams, lakes and wetlands found within the Oregon City Urban Growth Area;

j. Be designed in a manner to allow economical future maintenance; and

k. Be designed using materials to insure a minimum practical design life of 75 years.

1.3 Standard Construction Specifications and Drawings

Except where the standards provide otherwise, design detail, workmanship and materials shall be in accordance with the following: a) APWA 1980 Standard Specifications and Drawings for Public Works Construction Oregon Chapter APWA; and b) Standard Detail Drawings adopted by the City of Oregon City and included in these Standards.

1.4 Definitions and Terms

Approved: Good or satisfactory as determined by the Governing Body.

Building Storm Drain: A building storm drain is that part of the piping of a stormwater drainage system which begins at the connection to the building storm drain at a point five (5) feet outside the established line of the building or structure and conveys stormwater to the approved point of disposal.

Connector Sewer: A sewer connecting structures (catch basins, etc.) that collect surface runoff to a lateral, trunk or outfall sewer.

City Engineer: The City Engineer for the City of Oregon City or its duly authorized representative.

Creek: Any and all surface water routes generally consisting of a channel having a bed, banks, and/or sides in which surface waters flow in a draining from higher to lower land, both perennial and intermittent.

Definition of Words: Wherever in these standards the words directed, required, permitted, ordered, designated or works of like importance are used, they shall be understood to mean the

direction, requirement, permission, or order of designation of the City Engineer. Similarly, the words approved, acceptable, and satisfactory shall mean approved by, acceptable to, or satisfactory to the City Engineer.

Design Storm: A storm event that, statistically, has a specified probability of being exceeded in any given year (expressed either in years or as a percentage).

Detention: Any type of facility designed to hold or delay storm runoff for a short period of time and then release it in a controlled manner back to the natural or man-made watercourse.

Drainage Facilities: Pipes, ditches, detention basins, creeks, culverts, bridges, etc., used singularly or in combination with each other for the purpose of conveying or storing runoff.

Drainage Conveyance: Pipe, ditch, creek, stream culvert, bridge, etc., used for the conveyance of runoff.

Downsizing: Reduction in the size of pipe installed in a closed conduit system proceeding in a downstream direction.

Drainage Master Plan: A document adopted by the City of Oregon City that described the existing and planned Major Drainage Collector System within the Oregon City Urban Growth Area. The planned drainage system is designed to convey projected runoff from the tributary areas when fully developed according the City of Oregon City and Clackamas County's adopted Comprehensive Plans.

Easement: A vested or acquired right to use land by other than a tenant for a specified purpose, such as the maintenance of storm sewers by the Governing Body, held by someone other than the Owner.

French Drain or Leach Line: An underground passageway for water through the interstices among stones loosely in a trench.

Governing Body: The duly elected legislative body of the unit of government having jurisdiction in the subject matter; the Board of County Commissioners of Clackamas County, Oregon; and/or the City Commission of the City of Oregon City, Oregon.

Hydrologic Soil Group: A soil characteristic classification system defined by the U.S. Soil Conservation Service in which a soil may be categorized into one of four soil groups (A, B, C, or D) based upon infiltration rates and other properties.

Hydrograph: A graph showing, at a given point on a stream or conduit, the runoff rate, or discharge rate, versus time.

Hyetograph: A graph of rainfall intensity versus time depicting a hypothetical storm event.

Junction: A location where two or more storm drains intersect.

Major Drainage Collector System: The network of watercourses or man-made facilities such as storm drains, ditches, culverts, bridges and detention facilities that connect the outlet or outfall of the subbasin drainage areas delineated as part of the City's Drainage Master Plan to their respective major drainage basin outfall.

Minor Drainage Collector System: The convenience drainage system consisting of street gutters, catch basins, small open channels and roadside ditches, curb inlets and connector drains that transport stormwater runoff from its origin to the outlet or outfall of the subbasin drainage areas or lateral drainage areas delineated as part of the City's Drainage Master Plan.

Major Partition: A partition which includes the creation of a road or street, excepting private streets created for forestry, mining or agricultural purposes which do not or will not serve as access to homesites.

Minor Partition: A partition which is subject to approval of the Governing Body's Land Use and Development Ordinance, and which does not include the creation of a road or street.

Natural Location: The location of those channels, swales, and other nonman-made conveyance systems as defined by the first documented topographic contours existing for the subject property either from maps or photographs.

On-Site Detention: The storage of excess stormwater runoff on the development site prior to its entry into a public storm drain system and the gradual release of the stored runoff after the peak of the runoff has passed.

Owner: The Owner of record of real property as shown on the latest tax rolls or deed records of the governing authority, or a person who is purchasing a parcel of property under recorded agreement.

Peak Discharge: The maximum stormwater runoff rate (cubic feet per second, cfs) determined for the design storm. Unless otherwise stated, the peak discharge is to be calculated assuming full development in the tributary area.

Plans: Construction documents and specifications, including system site plans, storm drain plans and profiles, cross sections, detailed drawings, etc., or reproductions thereof,

approved or to be approved by the City or County, which show the location, character, dimensions, and details for the work to be done.

Private Storm Drain: A storm drain located on private property serving more than one structure on the same premises or parking lot catch basins.

Project Engineer: The developer's consulting engineer including the Governing Body's engineer, licensed by the State of Oregon as a Civil Engineer under whose direction plans, profiles, and details for work are prepared and submitted to the Governing Body for review and approval.

Public Storm Drain: Any storm drain in public right-of-way or easement operated and maintained by the City or County.

Release Rate: The controlled rate of release of drainage, storm and runoff water from property, storage pond, runoff detention pond, or other facility during and following a storm event.

Right-of-Way: All land or interest therein which by deed, conveyance, agreement, easement, dedication, usage or process of law is reserved for or dedicated to the use of the general public, within which the recognized governing body shall have the right to install and maintain storm drains.

Retention Facility: A drainage facility designed to hold stormwater for a considerable length of time and then consume it by evaporation, plant transpiration, or infiltration into the soil without intentionally returning it to the natural or man-made watercourse from which it entered the facility.

Sedimentation: The process of subsidence and deposition of suspended matter, carried by water, by gravity.

Silt: Fine textured soil particles including clay and sand (largely passing a No. 200 sieve) as differentiated from course particles of sand and gravel.

Siltation: Deposition of (silt) waterborne sediments - fine textured soil particles causing a smoothing or cementing effect over sand and gravel areas used by migratory fish for spawning (includes colloidal material when the transporting water evaporates).

Slope Intercept Drain: A drain or system of drains used to intercept and divert both surface runoff and groundwater, prior to concentration, away from areas subject to erosion or instability.

Standard Plans: Details of structures, devices or instructions adapted by the Governing Body, as a standard (refer to Section 1.3, Standard Construction Specifications).

Street, Private: Any street, road or right-of-way which is not a public street as defined in this Standard.

Street, Public: A street or road which has been dedicated or deeded to the use of the public. For the purposes of these Standards, public street may include "alley," "lane," "place," "court," "avenue," "boulevard," and similar designations, and any County roads and State highways.

Structures: All improvements to land that are used or expected to be used in the operation of a utility, including buildings, utility lines, manholes, catch basins, driveways, sidewalks, etc.

Stormwater Management: Encompasses "control," "developmental" and "maintenance" activities in which there is physical interaction with stormwater.

Subdivide Land: To divide an area or tract of land into four or more lots within a calendar year when such area or tract of land existed as a unit or contiguous units of land under a single ownership at the beginning of the year.

Subdivision: Either an act of subdividing land or an area or tract of land subdivided as defined in this section.

Terrace: A level step constructed in the face of a grade surface for drainage, erosion control, and maintenance purposes.

Time of Concentration: The time period necessary for surface runoff to reach the outlet of a subbasin from the hydraulically most remote point on the tributary area.

Travel Time: The sum of time intervals for overland flow, sewer or gutter flow, and pipe and channel flow from the hydraulically most remote point in the tributary to the discharge point of interest.

Watercourse: A channel in which a flow of water occurs, either continuously or intermittently, and if the latter, with some degree of regularity. Such flow must be in a definite direction. Watercourses may be either natural or artificial, and the former may occur either on the surface or underground.

1. Artificial: A surface watercourse constructed or modified by human agencies, usually referred to as a channel or ditch.

2. Natural: A surface watercourse created by natural agencies and conditions, usually referred to as a creek or stream.

Wetlands: Either natural areas with flat slopes and peat-type soil conditions that are capable of storing water during periods of high stream flows or areas which have standing water as a result of man-made drainage obstructions.

2.0 POLICY

2.1 Applicability

These Standards shall govern all construction and upgrading of all public and private drainage facilities in the City of Oregon City Urban Area including both incorporated and unincorporated areas.

Permanent drainage facilities shall be provided on all property improvements within the City of Oregon City Urban Area per these Standards for the following types of development:

a. All major or minor partitions and subdivisions.

b. All commercial, industrial, and multi-family developments creating new impervious surfaces greater than three thousand square feet in area within any twelve-month period.

c. Developments entailing construction which would change the point of discharge of surface waters, the quantity of discharge, or discharge surface waters at a higher velocity than that of the preconstruction discharge rate, or add to pollution of surface waters.

d. Construction or reconstruction of public roadways and temporary detours.

e. Developments entailing construction in or adjacent to any existing stream or surface watercourse including intermittent streams.

2.2 Engineering Policy

The engineering policy of the City of Oregon City requires strict compliance with Oregon Revised Statute 672 for professional engineers.

All engineering plans, reports or documents shall be prepared by a registered professional Civil Engineer, or by a subordinate employee under his direction, and shall be signed by the engineer and stamped with his seal to indicate his responsibility for them. It shall be the project engineer's responsibility to review any proposed storm drain system, extension, and/or existing

system change with the Governing Body prior to engineering or proposed design work, to determine any special requirements or whether the proposal is permissible. A "Preliminary Review" and-/or a "Plans Approved for Construction" stamp of the Governing Body, on the plans, and etc., for any job, does not in any way relieve the project engineer of his responsibility to meet all requirements of the Governing Body or obligation to protect the life, health and property of the public. The Plan for any job shall be revised or supplemented at any time it is determined that the full requirements of the Governing Body have not been met.

2.3 Approval of Alternate Materials or Methods

Any alternate material or method not explicitly approved in these Standards will be considered for approval on the basis of the objectives set forth in Section 1.1, Purpose. Persons seeking such approvals shall make application in writing. Approval of any major deviation from these Standards will (normally) be in written form. Approval of minor matters will be made in writing if requested.

Any alternate must meet or exceed the minimum requirements set in these Standards.

The written application is to include, but is not limited to, the manufacturer's specifications and testing results, design drawings, calculations, and other pertinent information.

Any deviations or special problems shall be reviewed on a case-by-case basis and approved by the City Engineer. When requested by the City Engineer, full design calculations shall be submitted for review with the request for approval.

3.0 DESIGN CONSIDERATIONS

3.1 General

Storm drainage design within a development area must include provisions to adequately control runoff from all public and private streets and the roof, footing, and area drains of residential, multi-family, commercial or industrial buildings, and to insure future extension of the drainage system to the entire drainage basin in conformance with the adopted Storm Drainage Master Plan. Storm drainage system requirements include:

a. Surface or subsurface drainage, caused or affected by the changing of the natural grade of the existing ground or removal of natural ground cover or placement of impervious surfaces, shall not be allowed to flow over adjacent public

or private property in a volume or location materially different from that which existed before development occurred, but shall be collected and conveyed in an approved manner to an approved point of disposal.

b. Surface water entering and exiting the subject property shall be received and discharged at naturally occurring locations with no diversion at either of these points unless a diversion is called for in the Drainage Master Plan. Surface water exiting the subject property shall be discharged with adequate energy dissipators within the subject property to minimize downstream damage and erosion.

c. The approved point of disposal for all stormwater may be a storm drain, natural drainageway, creek detention or retention pond approved by the City Engineer. Acceptance of suggested systems will depend upon the prevailing site conditions, capacity of existing downstream facilities, and feasibility of the alternate design.

d. When private property must be crossed in order to reach an approved point of disposal, it shall be the developer's responsibility to acquire from the property owner a recorded drainage easement meeting the approval of the City Engineer. Dimensions shall be in accordance with those included in Section 4.8. Temporary drainage ditch facilities, when approved, must be engineered to contain the stormwater without causing erosion or other adverse effects to the private property being crossed.

e. The design storm peak discharge from the subject property may not be increased from conditions existing prior to the proposed development except where it can be satisfactorily demonstrated by the applicant that there is no adverse impact to the downstream drainage system, or there is a mechanism and funding method acceptable to the City Engineer in place to mitigate any adverse impacts to the off-site drainage system.

f. Minimum width of an access easement from and existing public road to a drainage facility shall be twenty (20) feet.

g. Drainage from roofs, footings, and downspouts may drain directly to a street through the curb under the following circumstances:

1) The building's first floor elevation is at least two (2) feet above the existing street curb, and

2) The existing street section will not permit runoff to flow across the street. This requirement will be

waived if an approved type of curb and gutter is existing or installed.

h. Vegetation shall be established on areas disturbed by construction within two months after any disturbance to minimize erosion, in accordance with Section 6.0 of the Standards.

3.2 Storm Recurrence Intervals for Design of Drainage Improvements

The storm recurrence interval used for the design of required drainage improvements will be based on the criteria presented in Table 4.1 of the City's Drainage Master Plan.

3.3 Peak Discharge

3.3.1 Drainage Master Plan

Drainage improvements shall be implemented according the findings and recommendations presented in the adopted Oregon City Drainage Master Plan. For design of additional drainage facilities required along the major drainage collector systems throughout the Oregon City area, the peak discharge for the appropriate design recurrence interval (see Section 3.2) tabulated in the City's Drainage Master Plan shall be used.

3.3.2 Minor Drainage Collector Systems

For design of drainage facilities required along the minor drainage collector systems throughout the Oregon City area, the peak discharge (in cubic feet per second) for the appropriate design recurrence interval (see Section 3.2) shall be determined by the use of the following regression equations:

$$Q\ (5\ Yr) = 44.0\ (DA)^{.81}\ (EIA)^{.38}\ (CN/85)^{2.0}$$

$$Q\ (10\ Yr) = 51.5\ (DA)^{.80}\ (EIA)^{.37}\ (CN/85)^{1.9}$$

$$Q\ (25\ Yr) = 61.6\ (DA)^{.78}\ (EIA)^{.35}\ (CN/85)^{1.7}$$

$$Q\ (50\ Yr) = 72.0\ (DA)^{.77}\ (EIA)^{.34}\ (CN/85)^{1.4}$$

$$Q\ (100\ Yr) = 84.3\ (DA)^{.77}\ (EIA)^{.34}\ (CN/85)^{1.3}$$

Where:

<u>DA</u>: Area of the drainage basin, in square miles, planimetered from the appropriate 1 inch equals 200 feet drainage basin map(s) provided to the City as part of the adopted Drainage Master Plan. The above equations should be used for drainage basins whose areas are less than 100 acres (i.e. .156 square miles).

EIA: Effective impervious area, in percent, computed from the appropriate OTAK EIA equation presented in Appendix C of the Drainage Master Plan.

CN: SCS curve number for the pervious portion of the drainage area under consideration. The basin's pervious area curve number should be a weighted average based on the various SCS hydrologic soil groups associated with the surface soils located throughout the drainage area under consideration. Table 4.2 of the Drainage Master Plan presents the established relationship between curve number and the SCS hydrologic soil group. Table 2.1 of the Drainage Master Plan presented the assigned hydrologic soil group for each soil type found throughout the Oregon City Urban Growth Area. The aerial location of these soil types is shown in the SCS Soil Survey for Clackamas County, Oregon.

3.4 Storage Detention Volume

When on-site stormwater detention is required as part of a new development, the design volume of the on-site detention facility must be computed. A triangular hydrograph method will be used and the design volume will be based on the following equations.

$$V = (Td/2)\ (1-[Qe/Qu])\ (Qu-Qr) + (Tr/2)\ (Qe - Qr)$$

Where:

V = Design volume of the on-site detention facility in cfs - hrs (multiply by 3600 to obtain volume in cubic feet).

Qe = The existing peak discharge (cfs) from the site based on the appropriate 3.3.2 equation (the EIA value used in computing Qe should not be less than 4).

Qu = The ultimate future peak discharge (cfs) from the site based on the appropriate 3.3.2 equation.

And:

$$Tp = .05 + TLAG$$

$$Td = 2.67\ Tp$$

$$Tr = Qe\ Tp\ /\ Qu$$

$$Tf = Td - (1.67\ Qe\ Tp\ /\ Qu)$$

$$Qr = Qe\ Tr\ /\ Tf$$

Where:

TLAG = The lag time (hrs) of the site drainage based on ultimate development conditions and the equations presented in Appendix C of the adopted City's Drainage Master Plan.

Tp = The time (hrs) of the ultimate development peak discharge (Qu) which helps define the shape of the triangular inflow hydrograph.

Td = The base (hrs) of the ultimate development triangular hydrograph (i.e. inflow hydrograph to detention facility).

Tr = The time (hrs) that the existing peak discharge (Qe) is assumed to occur on the rising limb of the triangular inflow hydrograph.

Tf = The time (hrs) that the existing peak discharge (Qe) is assumed to occur on the falling limb of the triangular inflow.

Qr = The estimated release rate (cfs) from the detention facility when time Tr occurs.

4.0 STORM DRAIN REQUIREMENTS

The following sections define the physical design requirements for public storm drains in the Oregon City Urban Growth Area. These design requirements may be used for private systems when plumbing code requirements cannot be met, provided the system is designed by a professional civil engineer.

4.1 Pipe Materials

Pipe materials for public storm drains shall conform to the Standard Construction Specifications of these Standards (refer to Section 1.3). Pipe materials shall be designed for the load requirement imposed upon them.

Acceptable types of pipe material, abbreviations and requirements are as follows:

ACCEPTABLE MATERIALS FOR STORM DRAINAGE IMPROVEMENTS

Pipe Material	Abbreviation	Requirements
Concrete Pipe	CONC or CP	ASTM C-14, Class 3 (Max. Size = 18")
Concrete Pipe	CONC or CP or RCP	ASTM C-76, Class III (Minimum)

Corrugated Aluminum Pipe	CAP	AASHTO M-196
Polyvinyl Chloride	PVC	ASTM 3034

Approval of alternate materials will be reviewed on a case-by-case basis for approval and shall include cast-in-place pipe methods.

Private storm drain pipe materials shall conform to Section 1403 of the Oregon State Plumbing Specialty Code.

4.2 Size

4.2.1 Closed Conduits

Storm drains shall not be less than twelve (12) inches inside diameter and shall begin at a structure and shall terminate at an approved point of disposal.

4.3 Manning's Coefficient

Coefficient's of roughness (Manning's "n" values) for design of storm drainage facilities shall be as follows:

SUGGESTED VALUES OF MANNING'S ROUGHNESS COEFFICIENT

Closed Conduits	
Concrete, steel troweled or smooth-form finish	n = .014
Concrete pipe, precast or cast-in-place	n = .013
Concrete, wood flat, or broomed finish	n = .016
Asphaltic concrete	n = .016
Corrugated metal pipe (aluminum)	n = .024
Polyvinyl chloride pipe or polyethylene pipe	n = .011
Open Channels	
Natural	n = .030 - .070
Artificial	n = .020 - .040
Other Materials or Construction Types	Reviewed on a case-by-case basis

4.4 Minimum Slope and Velocity

4.4.1 Closed Conduits

All storm drains shall be laid on a slope which will produce a mean velocity (when flowing full, not under pressure) of at least three (3) feet per second (fps) based upon Manning's pipe

friction formula using a roughness coefficient as listed in Section 4.3, or the pipe manufacturer's recommendations, whichever is greater. The minimum acceptable slope for various pipe sizes are listed below:

MINIMUM PIPE SLOPE FOR MAINTAINING MINIMUM VELOCITY IN CONCRETE PIPE (Manning's n = 0.013)

Inside Pipe Diameter (Inches)	Slope (feet per 100 feet)
12	0.44
15	0.32
18	0.25
21	0.21
24	0.17
27	0.15
30 (and larger)	0.13

The minimum slope may be reduced from the above table to produce an absolute minimum velocity of 2.5 fps upon approval of the City Engineer if it is not feasible to construct a pipe with a 3.0 fps velocity.

4.4.2 Open Channels

Minimum velocity for open channels at design flow shall be 2.0 fps unless approved otherwise by the City Engineer.

4.5 Alignment

Storm drains shall be laid on a straight alignment or on horizontal curves conforming to the street curvature, but not less than a radius of 200 feet.

4.6 Anchor Walls

Storm drains laid on slopes of twenty (20) percent or greater shall be secured by anchor walls.

Where velocities greater than ten (10) feet per second are attained, special provision shall be made to protect structures against erosion and displacement by shock.

4.7 Cover Requirements

All storm drains shall be laid at a depth sufficient to protect against damage by traffic and to drain building footings where practical. Sufficient depth shall mean the minimum cover from the top of the pipe to finish grade at the storm drain alignment.

Under normal conditions minimum cover shall be thirty (30) inches above the top of the pipe in paved areas and thirty-six (36) inches at all other locations.

In areas of relatively flat terrain, the design engineer must show that sufficient depth is provided at the boundary of the development to properly drain the remainder of the upstream basin area tributary to the site.

4.8 Location

Where storm drains are being designed for installation parallel to other utility pipe or conduit lines, the vertical location shall be in such a manner that will permit future connections and avoid conflicts with parallel utilities without abrupt changes in vertical grade.

4.8.1 Storm Drains in Streets or Easements

a. Under normal conditions, storm drains shall be located in the street right-of-way within four (4) feet of the curbline and preferably on the low side of the street, except when catch basin location warrants otherwise. All exceptions shall be reviewed on a case-by-case basis for approval. All storm drains not in streets shall be in easements.

b. When it is necessary to locate storm drains in easements, the storm drain shall be centered in the easement. Easement shall be located on one lot rather than centered over a lot line. all storm drain easements shall be exclusive and shall not be used for any purpose which would interfere with the unrestricted use of the storm drain line. Exception to this requirement will be reviewed on a case-by-case basis, such as a utility corridor in a new subdivision.

c. Ditches and open channels in property other than public property will require a drainage easement sufficient in width to accommodate a 15-foot wide access along each side of the channel when the channel top width exceeds 30 feet and the design flow is greater than 100 cfs. When the channel top width is 30 feet or less and the design flow is less than 100 cfs, a 15-foot wide strip for an access road will be required on only one side.

e. Easement locations for public storm drains serving a PUD, apartment complex, or commercial/industrial development shall be in parking lots, private drives, or similar open areas which will permit an unobstructed vehicle access for maintenance by City-County forces.

f. All easements must be furnished to the Governing Body for review and approval prior to recording.

4.8.2 Relation to Creeks and Drainage Channels

Storm drain lines shall enter a creek or drainage channel at 90 degrees or less to the direction of the flow. The outlet shall have a head wall and scour pad or riprap to prevent erosion of the existing bank or channel bottom. The size of the pipe and channel being entered will govern which protective measures are required. All protective measures must conform to the requirements of Section 6 of these Standards.

4.9 Slope Intercept Drains

Slope intercept drains shall be provided at the following locations and shall be designed with the requirements of Section 6 of these Standards with respect to erosion control:

a. Along the upper boundaries of a development where the natural ground slope exceeds ten (10) percent to intercept drainage from the tributary area above the site.

b. Along the lower boundary of a development where the natural ground slope exceeds ten (10) percent to prevent drainage onto a lower tributary other than by means of an approved point of disposal.

c. Along the top of all cut slopes which exceed 2:1 where the tributary drainage area above the cut slope has a drainage path greater than forty (40) feet measured horizontally from the hinge point of the cut.

4.10 Subsurface Drainage

Subsurface drains (under drains) shall be provided at the following locations:

a. On cut and fill slopes for stability when required by the City Engineer except when a soils report submitted by a registered professional engineer experienced in soils certifies they are not required.

b. For all existing springs or springs intercepted during construction activity for other facilities, i.e., sewer, water mains or street excavations.

c. Where high ground water exists or when it is necessary to reduce the piezometric surface to an acceptable level to prevent land slippage or underfloor flooding of buildings.

4.11 Spacing of Storm Drainage Appurtenances

In general, storm drains shall be designed to have access for cleaning no further than 400 feet apart with junctions made at manholes, cleanouts or catch basins.

4.12 Catch Basins and Cleanouts

a. Catch basins and inlet structures may be used in lieu of manholes for the junction of pipes fifteen (15) inches or less in diameter, where the depth from rim to invert is less than four (4) feet. Pipe lines eighteen (18) inches in diameter may be connected to the larger dimension of the structure (catch basin) when the structure is formed and poured around the pipe during new construction.

b. The maximum length of curb and gutter which will be permitted without a catch basin is four hundred (400) feet.

c. Stormwater entering a closed storm drainage system shall be via catch basins as shown on City or County Standards for debris and silt removal.

d. The width of gutter flow shall not go past the shoulder and one travel lane or top the curb for a ten (10) year design storm.

e. Catch basins shall be designed to completely intercept the ten (10) year design storm gutter flow.

f. Any closed storm sewer system collecting runoff from paved areas in public or private property shall provide for oil separation prior to discharge of the system to any off-site hydraulic conveyance system unless otherwise approved by the City Engineer.

4.13 Manholes

a. Manholes or curb inlets with manhole type access shall be installed at all pipe junctions where the depth from rim to invert exceeds four (4) feet or where the pipe is eighteen (18) inches in diameter or greater.

b. Manholes shall conform to the Governing Body's Standard drawing.

c. Where the pipe size decreases upstream through the manhole, the upstream invert shall be set above the downstream invert a distance, at least, equal to the difference in the two diameters (the crowns kept at the same elevation).

4.14 Curb and Gutter - Types and Application

In general, curb and gutter shall be installed on all new street construction or reconstruction to control drainage from sheet flowing across the street, to preserve curb exposure during subsequent overlays, and to eliminate cracking new curbs during the street paving operation.

4.15 Surface Drainage

For purposes of these Standards, surface drainage routes will be classified according to two general categories: artificial watercourses and natural creeks.

4.15.1 Artificial Watercourse Requirements

a. Manmade channels shall be designed with a variable side slope not greater than two to one. The channel shall include a low flow channel as described in "c" below and will be reviewed on a case-by-case basis for approval.

b. Channel design along curves shall be curvilinear with a 100 foot minimum radius. Tighter curves may be used if the City Engineer determines that sufficient erosion control has been incorporated into the design to maintain stable bank conditions following development.

c. A low flow channel shall be designed to carry ten (10) percent of the design storm. Low flow channel slopes shall not exceed two to one and shall be stabilized to the satisfaction of the City Engineer. In general, bank stabilization will be required in any channel with a design flow velocity in excess of three feet per second.

d. New roadside ditch construction adjacent to public streets by new developments will not be permitted. Exception to this requirement will be reviewed on a case-by-case basis.

e. Capacity of channels shall be determined by the Manning Formula. The value for "n" shall be 0.035 for maintained grass-lines swales. The value for "n" shall be 0.40 for channels with rock-lined bottoms.

f. All ditches shall be designed with a minimum freeboard of 0.5 feet when the design discharge is 10 cfs or less and 1 foot when the design discharge is greater than 10 cfs.

g. Existing ditches approved for the point of disposal for storm drains and culverts shall be provided with rock-lined bottoms and side slopes at the discharge point of storm drain or culvert. The rock shall extend for a minimum distance of eight feet downstream from the end of the storm drain or culvert, or to where flow velocities are less than ten (10) feet per second, whichever is greater. These requirements are in addition to those required by Section 6.

h. All channel sides and bottoms shall be seeded, sodded, or rock-lined immediately following construction. Bank stabilization measures shall be consistent with Section 6 of

these Standards unless the City Engineer determines other proposed methods provide equal or greater erosion control.

h. Points of discharge from culverts and storm drains into ditches and swales having grades 15 percent or greater shall be rock-lines with boulders with one face a minimum of 24 inches in dimension. Said rock lining shall extend for a distance of ten (10) feet minimum from the point of culvert or storm drain discharge and shall have a width three (3) feet in excess of the diameter of the culvert or storm sewer. Special energy dissipators may be substituted for boulders at the discretion of the City Engineer.

4.15.2 Natural Watercourses (Creeks)

a. Natural watercourses (see Definitions) shall be preserved and all work in and adjacent to creeks shall incorporate both temporary and permanent erosion control measures in accordance with Section 6 of these Standards. No alteration will be permitted that reduces the overall creek capacity.

b. Creek channel design and construction practices shall be such that the cumulative incremental effects of creek work considered alone or together with existing or similar projects in the vicinity will not result in substantial damage to existing waterways and surface waters by erosion, siltation or sedimentation, significant changes in water quality, increased downstream water velocity, significant harmful deterioration of groundwater drainage, or significant deterioration of aquatic wildlife habitat as determined by the City Engineer.

c. Creek construction, relocation and/or reconstruction may be approved if the City Engineer determines that such a proposal will result in an overall benefit to or maintenance of a surface water system of equal quality in terms of water quantity and quality control.

d. Any and all stream work shall be consistent with the floodplain management policies and regulations set forth in local ordinances of the Governing Body.

e. Any and all stream work shall be consistent with the City's Storm Drainage Master Plan.

5.0 STORMWATER DETENTION

If a reliable source of continuous funding for the recommended major capital improvement projects (CIP) presented in the City's Drainage Master Plan is obtained, on-site detention for proposed new developments within the Oregon City Urban Growth Area will not normally be required as part of the development's storm

drainage design unless it is determined by the City Engineer that extra ordinary conditions exist and on-site detention will be required. Until the CIP funding issue is resolved the following criterion will be applied to all proposed commercial, industrial and multi-family residential developments and single family residential subdivisions greater than five acres. If (a) the 25-year peak runoff rate from the proposed development combined with any upstream contributions from existing watershed conditions exceeds the capacity of any existing downstream channels, culverts, bridges, or storm sewers, and (b) the City believes an undesirable flooding problem will occur and a significant portion of the problem results from runoff from the proposed development, or the proposed development is compounding an existing flooding problem, then the City will require the developer to provide on-site stormwater detention as specified in Section 5 of these standards.

5.1 General Requirements

a. All stormwater runoff originating from and/or draining to any proposed development shall be controlled and/or conveyed in accordance with all standards and policies described in these Standards. When exiting conditions make stormwater detention impossible for a portion or a site, the City Engineer may permit compensatory storage volume to be provided on another portion of the site, provided the total site area is tributary to one drainage basin both prior to and after development. In no case shall the runoff from the total site exceed the allowable release rate.

b. Detention requirements may be waived by the City Engineer when discharge will be released directly into the Willamette or Clackamas River or Abernethy Creek. Direct discharge shall not exclude the use of erosion control or other water quality control techniques within the development.

c. Detention facilities shall be open as basins or ponds, parking lot ponding, or underground storage (pipe/chamber), or combinations of any of the above.

d. Each detention facility shall be designed to reduce the 25-year recurrence interval peak flow based on after development on-site conditions to that peak flow that would have occurred during a 10-year recurrence interval event based on the before development on-site conditions. The equations presented in Section 3.3.2 of these Standards shall be used to determine these peak discharges.

e. The design storage volume for each detention facility will be based on the equations presented in Section 3.4 of these Standards.

f. The detention facility will be design such that the design storage volume will occur when the outflow of the facility reaches the estimated 10-year recurrence interval peak flow based on before development on-site conditions (i.e. Qe in Section 3.4 equations).

g. Drainage plans shall include a plan and profile of the facilities. The profile requirement for private drainage systems may be waived at the discretion of the City Engineer when sufficient data are provided on the plan in a clear and concise manner including the following minimum hydraulic and physical data: 1) grades, bottom elevations of ditches, channels, ponds and swales, parking lots, and recharge trenches; 2) inverts of pipes; 3) inverts and tops of all structures such as manholes, catch basins, chambers or similar structures; and 4) size, length and slope of all pipes or other detention or conveyance facilities, including the invert elevations of the existing or any other storm drainage system which the subject drainage proposes to discharge. The design volume of all detention facilitates shall also be shown on the plan as well as a note indicating that facilities shall be inspected prior to paving and/or landscaping. Hydrologic calculations shall be submitted along with the detention facility drainage plans.

h. All aspects of public health, safety, maintenance, nuisance abatement, and vector control must be carefully reviewed in every drainage control system plan. Protective measures are often necessary and shall be required whenever appropriate.

i. The frequency and difficulty of future maintenance can be minimized by thorough consideration during design of what could possibly go wrong in the system and what would be required to correct the problem. Facility design must incorporate maintenance considerations to ease such problems.

j. Discharges from the detention facility shall be to a storm drain, drainage channel, or other approved drainage course. Downstream impacts of the possible discharge shall be analyzed and submitted to the City Engineer along with the facility plans.

5.2 Additional Requirements for Open Detention Basins

a. Slopes on all interiors of surface ponds shall not exceed three (3) feet horizontal to one (1) foot vertical for all detention ponds in PUD's, subdivisions, and land partitions. Ponds shall have at least one interior slope not exceeding three(3) feet horizontal to one (1) foot vertical with all other interiors exceeding three to one (3:1) to be either retaining walls designed by a licensed structural engineer or a design submitted by a licensed engineer experienced in

soils mechanics. Slopes on pond exteriors shall not exceed two horizontal to one vertical.

b. The bottom of all ponds less than three (3) feet deep shall have six (6) feet as a minimum dimension or as approved by the City Engineer. The bottom of all ponds three (3) feet or more deep shall have fifteen (15) feet as a minimum dimension.

c. Ponds suited to multiple use are encouraged. Examples of multiple uses are sport courts, play areas, neighborhood parks, and picnic areas. Such ponds may be designed with engineered walls (with slopes exceeding three to one) as approved by the City Engineer on a case-by-case basis.

d. All ponds shall be landscaped so as to provide slope stability and pleasant appearance by utilizing sodding, seeding, and planting of trees and shrubbery (see Section 6 of these Standards). Under no circumstances shall use of easily floatable or erodible materials (such as "bark dust") be permitted in pond interiors.

e. Maintenance of surface ponds shall be the responsibility of the Governing Authority.

f. All City/County maintained detention pond control structures not abutting a public right-of-way shall be accessible to City/County staffs for maintenance and operation. Access easements shall be provided which shall be a minimum of fifteen (15) feet wide and shall accommodate vehicular traffic. Control structures shall be designed to operate automatically.

g. Vehicular access must be provided to the bottom of the retention/detention pond when the bottom width of the pond is 20 feet or greater and/or when the height of the pond interior wall exceeds five (5) feet. This will generally be multi-use ponds that require access for mowing.

h. The access grade into the proposed retention/detention pond shall be no steeper than five (5) feet horizontal to one (1) foot vertical.

i. All detention ponds shall have a minimum of one (1) foot of freeboard above the maximum design water surface.

j. Any embankment for a detention pond must be designed by a qualified soils engineer and approved by the City Engineer. The soils engineer, experienced in soils mechanics, shall inspect and certify the construction of any such berm and state that the berm has low permeability and that the pond (earth dam) is safe for the intended use. Notes to the

effect of the above shall be shown on the plans submitted for approval.

k. Any embankment less than three (3) feet, including one (1) foot of freeboard, in depth forming one or more sides of a retention/detention pond shall have a minimum six (6) foot wide top of berm with a back slope not to exceed two horizontal to one vertical unless otherwise approved by the City Engineer, and designed by and construction being certified by a licensed engineer experienced in soils mechanics.

l. All constructed and graded detention ponds shall be sloped no flatter than 0.01 foot/foot (1 percent) towards the outlets for drainages.

m. The design of an open detention basin or pond shall include an emergency spillway to discharge into an approved drainage course. The spillway shall be designed to safely pass the 100-year recurrence interval peak flow based on after development on-site conditions.

n. Outlets of all detention ponds shall be provided with suitable debris barriers designed to protect the outlet from blockage or plugging.

o. The design volume of the detention pond shall be shown on the plan and the pond volume inspected prior to landscaping (a note to this effect shall be shown on the plans).

5.3 Easements

a. All detention ponds in plats may be required to be located in separate tracts dedicated to the Governing Body with access easements for maintenance where required.

b. Where a detention is located within the boundaries of a residential lot and not in a separate dedicated tract, the peak design discharge water surface elevation shall be shown as an easement on the final plat hard copy. Restrictions shall be added to the final plat hard copy and appear on the face of the plat.

c. A written restriction shall be added to the final plat hard copy to the effect that approval shall be obtained from the City Engineer before any structures, fill, or obstructions (including fences) are located within any drainage easement or delineated 100-year flood plain area.

d. An access gate for access roads may be required and shall be structurally and aesthetically acceptable for the use and

location proposed, or an acceptable alternative to control traffic must be provided.

e. A drainage easement shall be required for all public closed storm drainage detention systems. The City Engineer may require wider easements where pipe diameter or vault widths exceed four feet.

f. All publicly maintained stormwater drainage systems including collection, conveyance, and flow restrictors not located in right-of-way shall be located in drainage easements.

g. Permanent access and drainage easements shall be granted to the Governing Body for any stormwater detention facility to be maintained by the City/County maintenance personnel, which is located in a development, and for an access road to that facility where said facility and access road are located on property other than the development but serve the development. The owner in fee simple and contract purchaser of the property upon which the access road and facility are to be located shall execute the said easement. The minimum access easement width shall be twenty (20) feet.

6.0 EROSION AND SEDIMENT CONTROL

6.1 General

a. Provide measures for controlling runoff during all three phases of construction:

   1) Prior to excavation or construction.

   2) During excavation and construction.

   3) After construction until the site is stabilized.

b. For subdivision plats this shall include temporary erosion control measures to be utilized by the applicant during installation of plat improvement and by subsequent buildings during construction of dwellings and other lot improvements.

c. Prior to the initial clearing and grading of any land development, provisions shall be made for the interception of all potential silt-laden runoff that could result from said clearing and grading. Said interception shall preclude any silt-laden runoff from discharging from the proposed land development to downstream properties unless previously approved by the City Engineer. Said interception shall cause all silt-laden runoff to be conveyed by open ditch or other means to whatever temporary facility is necessary to remove silt prior to discharge to downstream properties.

d. Prior to initial clearing and grading of construction site, an evaluation of the following factors must be carried out:

1) Soil Erodibility: Soil erodibility shall be identified using Soil Conservation Service erodibility ratings. Erosion control techniques shall be designed accordingly.

2) Slope and Runoff: Cleared areas will require protection from erosion.

3) Cover: Erosion protection will be required for all disturbed areas.

e. Temporary/permanent hydroseeding or acceptable seeding and mulching must be provided whenever perennial cover cannot be established on sites which will be exposed for 60 days or more.

6.2 Temporary Erosion/Sedimentation Control Plan

a. A Temporary Erosion/Sedimentation Control Plan (TESCP) is required unless otherwise approved by the Governing Body.

b. During the TESCP design stages, certain potential water problems that should be considered include:

1. Disturbance of ground water tables.

2. Construction on or near potential landslide areas and extent of vegetation removal necessary.

3. Installation of adequate stream crossing structures where stream fordings are necessary.

4. Encroachments on stream flow by landfills, culverts dikes, and buildings.

5. Influences of increased stormwater runoff as imposed by cleared surface areas and of impervious streets, parking lots, and buildings.

6. Changes in drainage areas caused by diversions and gradings.

7. Development of on-site borrow pits.

8. Floodplain excavation work.

9. Stream channel improvement.

10. Disposal of petroleum wastes, pesticides, cement washings, and other chemicals.

11. Construction of access and haul roads.

12. Nearness of the construction site to streams, lakes, and other vulnerable areas.

c. The TESCP for a proposed construction site should delineate areas to be cleared and graded, identify cut and fill areas and show in detail the desilting facilities, interceptor ditches (channels), the maximum velocities, velocity check dams, soils, topography, vegetation and re-seeding practices, and anticipated construction period.

d. Sedimentation Basin: Site should be selected to provide adequate storage for approximately 0.5 inches of runoff per acre of drainage area. Trap or pipe spillway crest (if there is no emergency spillway). Combined capacity of the pipe and emergency spillways must be designed to handle a ten-year frequency storm. The embankment must have a minimum top width of six feet. Side slopes must be no steeper than 3:1, and the maximum fill height must be four (4) feet, including one (1) foot of freeboard, unless proven adequate by a soils consultant. Hydro-mulch or equivalent seeding of embankments will be required to minimize erosion. Temporary fencing of sediment storage areas will be required when dead storage exceeds 0.5 feet unless approved by the Governing Authority.

e. Check dams shall be employed or some other acceptable method to limit ditch velocities to five (5) feet per second unless rocked. "V" ditches may be used with side slopes not steeper than 2:1.

f. It is recommended whenever possible to locate intercepting ditches across future building sites to preserve natural vegetation. Intercepting ditches outside of future building sites should meander to avoid trees.

g. Cut-off trenches are recommended to dissipate drainage into the natural on-site vegetation. However, drainage from disturbed areas must be directed into a siltation pond prior to leaving the site unless otherwise approved by the City Engineer.

7.0 REFERENCES

a. Drainage Management Plan Design Standards, City of Roseburg, Department of Public Works, Prepared by Kramer, Chin, and Mayo, Inc., November, 1986.

b. Stormwater Management Design Standards, City of Salem, Department of Public Works, Planning Division, Salem, Oregon, 1983.

c. Storm Drainage Control, Requirements and Guidelines, King County Department of Public Works, Division of Hydraulics, Seattle, Washington, 1979.

d. Storm Drainage Control, Stormwater Management Practices, King County Department of Public Works, Division of Hydraulics, Seattle, Washington, 1979.

e. Urban Stormwater Management, Special Report No. 49, American Public Works Association, Chicago, Illinois, 1981.

f. Hydraulics Manual, Official Publication 74-3, Oregon State Highway Division, Oregon State Transportation Commission, Salem, Oregon.

g. Hydrology For Engineers and Planners, Allen T. Hjelimfelt, Jr., John J. Cassidy, Iowa State University Press, Ames, Iowa, 1975.

h. Standard Specifications and Drawings For Public Works Construction, American Public Works Association, Oregon Chapter, 1980.

i. Washington County Uniform Road Improvement Design Standards, Department of Land Use and Transportation Washington County, Oregon, October, 1986.

j. Soil Survey of Clackamas County Area, Oregon, U.S. Department of Agriculture, Soil Conservation Service, November, 1985.

8.0 STANDARD DRAWINGS

The following standard drawings have been included as part of the City of Oregon City's Drainage Design Procedures and Standards.

Drawing Title	APWA Drawing No.
Catch Basin	1-A
Catch Basin	1-B
Frame - Catch Basin	1-C
Grate - Catch Basin	1-D
Recessed Curb Inlet	2
Area Drain Type II	4
Frame-Area Drain Type II	5-A
Grate - Area Drain Type II	5-B
Area Drain Type I	6-A
Frame & Grate - Area Drain Type I	6-B
Discharge Structure	7
Intake Structure	8
Frame - Intake or Discharge Structure	8-A
Grate - Intake or Discharge Structure	8-B

Drawing Title	APWA Drawing No.
Curb Inlet Type - II	9-A
Curb Inlet Type - II	9-B
Gutter Inlet	10-A
Gutter Inlet Cover	10-B
Manhole	16
Shallow Manhole	None
Special Oversized Manhole	None
Manhole Frame and Cover	None

:1500

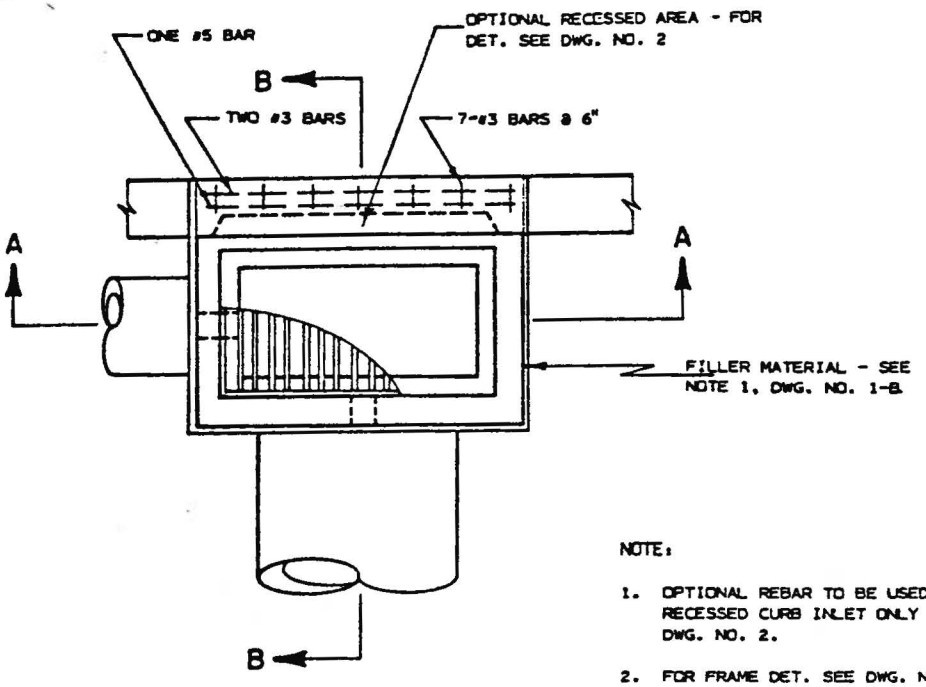

PLAN

NOTE:

1. OPTIONAL REBAR TO BE USED WITH RECESSED CURB INLET ONLY - SEE DWG. NO. 2.
2. FOR FRAME DET. SEE DWG. NO. 1-C.
3. FOR GRATE DET. SEE DWG. NO.'S 1-D, 1-E & 1-F.

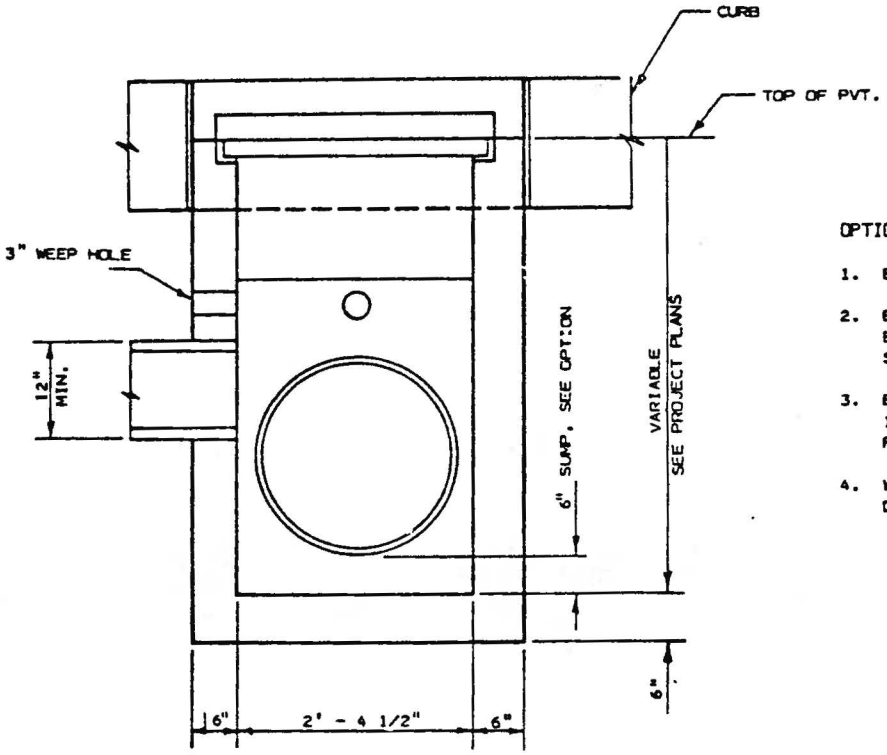

SECTION A-A
ELEVATION

OPTIONS:

1. ENGR. MAY OPT. TO DELETE SUMP.
2. ENGR. MAY SPECIFY BOTTOM TO BE SHAPED TO CONFORM TO SHAPE OF PIPE.
3. ENGR. MAY PERMIT BATTER OF 1/4" TO 1" TO FACILITATE FORM REMOVAL.
4. WEEP HOLE PLACED AS DIRECTED BY ENGR.

AMERICAN PUBLIC WORKS ASSOCIATION, OREGON STATE CHAPTER

CATCH BASIN

SEE CATCH BASIN DWG. NO. 1-B.

DATE: 6-1-79	DRAWING NO.: 1-A

"W" DIMENSION & MAX. DIA. PIPE

W	DIA. PIPE
1' - 1 7/8"	12"
1' - 8 7/8"	18"
*2' - 3 3/8"	24"

* REQUIRES TWO FRAMES
SEE DWG. NO.'S 1-C, 1-D, & 1-F.

EXAMPLE CONST. NOTE FORMAT

C. B. 12 - D

C. B. 12: INDICATES 12" MIN. PIPE DIAMETER.

D: INDICATES TYPE OF GRATE.

FOR GRADE TYPE, SEE DWG. NO.'S 1-D, 1-E, & 1-F.

NOTES: SEE CATCH BASIN DWG'S 1-A & 1-B

1. 3/4" PREFORMED JOINT FILLER MAT'L, TO BE USED AS SPEC'D. BY ENGR. ONLY IN CONC. PVT. OR GUTTER, & TO EXTEND THROUGH THICKNESS OF CONC.
2. CONST. C. B. PER DETAIL, BUT WITH DIMENSION "W" TO ACCOMMODATE LARGEST PIPE DIA. SPEC'D. WHEN "W" EXCEEDS 18 , PROVIDE TWO GRATES WITH 12" MIN. SIZE.
3. CONC. SHALL ATTAIN A MIN. COMPRESSIVE STRENGTH OF 3000 P.S.I. IN 28 DAYS.
4. IF APPROVED BY ENGR., WALLS MAY BE POURED AGAINST UNDISTURBED EARTH, EXCEPT THE TOP 8 INCHES, WHICH SHALL BE FORMED.
5. BACKFILL SHALL BE COMPACTED TO 95% DENSITY THROUGHOUT.

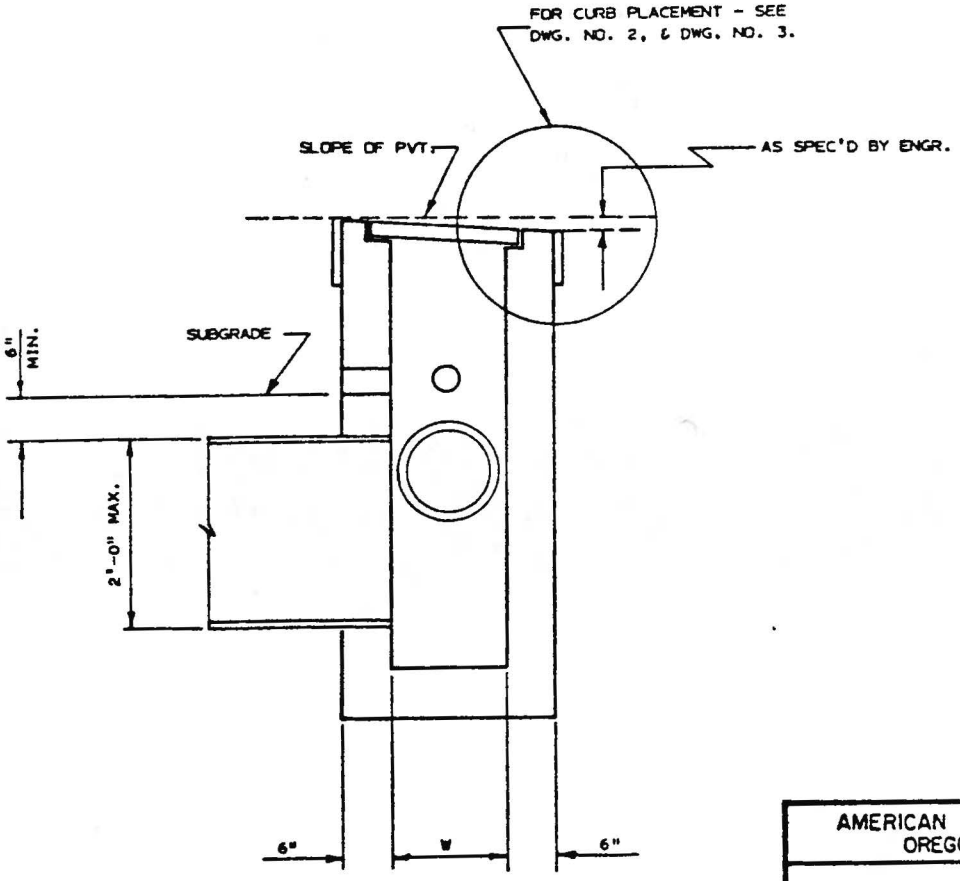

SECTION B-B
ELEVATION

AMERICAN PUBLIC WORKS ASSOCIATION, OREGON STATE CHAPTER

CATCH BASIN

SEE CATCH BASIN DWG. NO. 1-A

DATE:	DRAWING NO.:
6-14-79	1-B

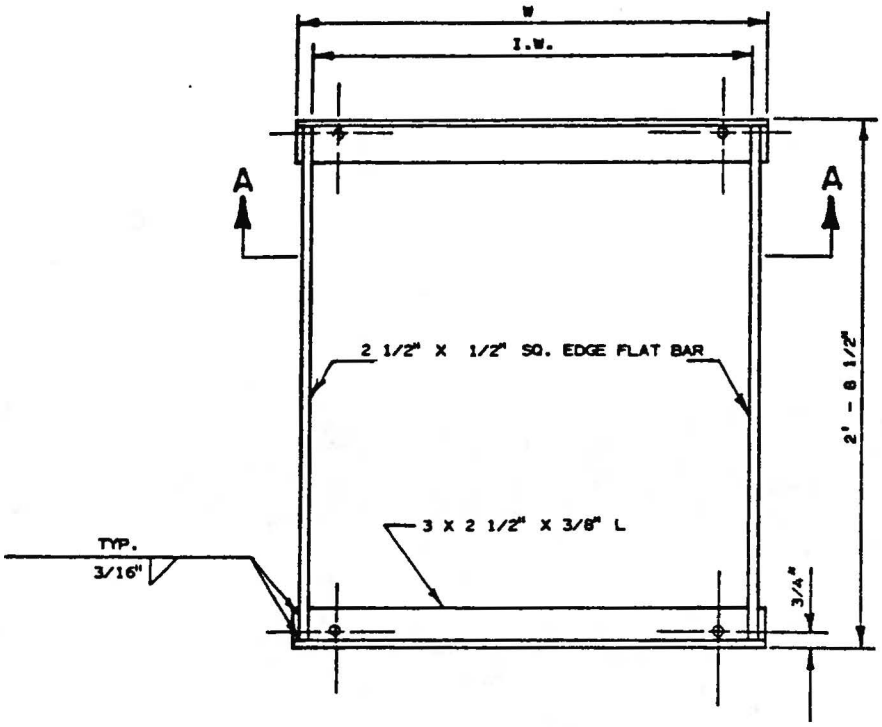

PLAN

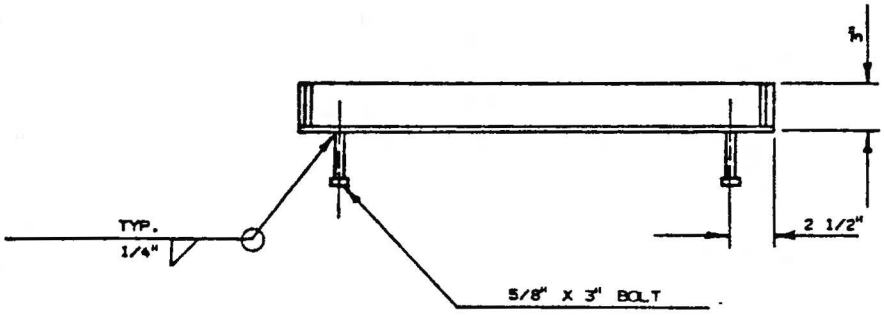

SECTION A-A

DIA. PIPE	W	I.W.
12"	1' - 3 1/4"	1' - 1 7/8"
18"	1' - 10 1/4"	1' - 8 7/8"
* 24"	2' - 4 3/4"	2' - 3 3/8"

*REQUIRES TWO GRATES
SEE DWG. NO. 1-F.

AMERICAN PUBLIC WORKS ASSOCIATION
OREGON STATE CHAPTER

FRAME

(For C.B.'S With 12", 18", or 24" Dia. Pipe)

DATE: 6-1-79

DRAWING NO.: 1-C

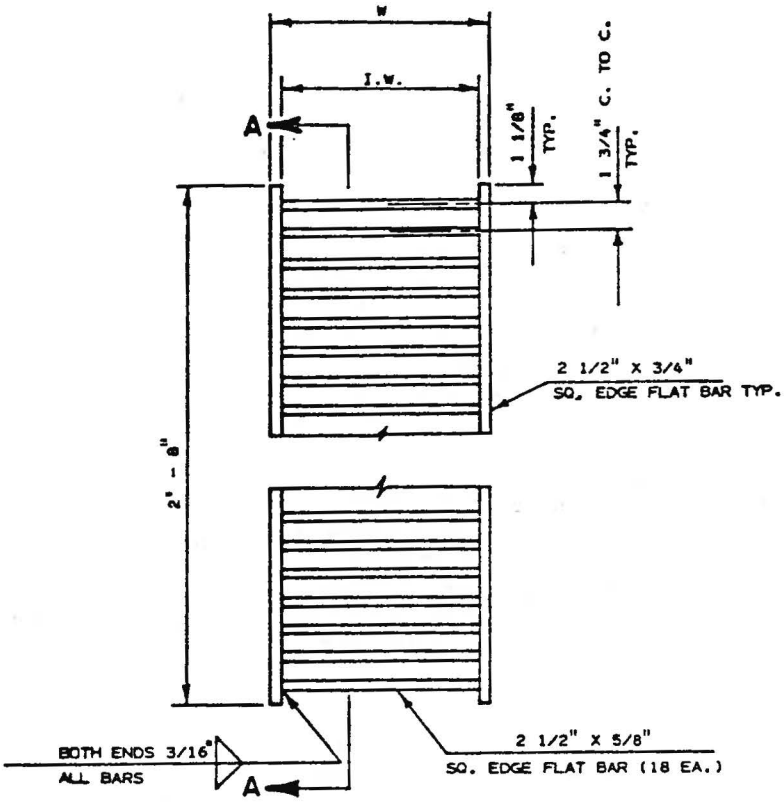

PLAN

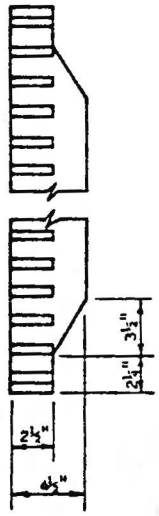

SECTION A-A

DIA. PIPE	W	I.W.
12"	1' - 1 1/2"	1' - 0"
18"	1' - 8 1/2"	1' - 7"
*24"	1' - 1 1/2"	1' - 0"

*REQUIRES TWO GRATES
SEE DWG. NO. 1-F.

AMERICAN PUBLIC WORKS ASSOCIATION,
OREGON STATE CHAPTER

GRATE

(For C.B.'s With 12", 18", or 24" Dia. Pipe)

DATE: 6-1-79

DRAWING NO.: 1-D

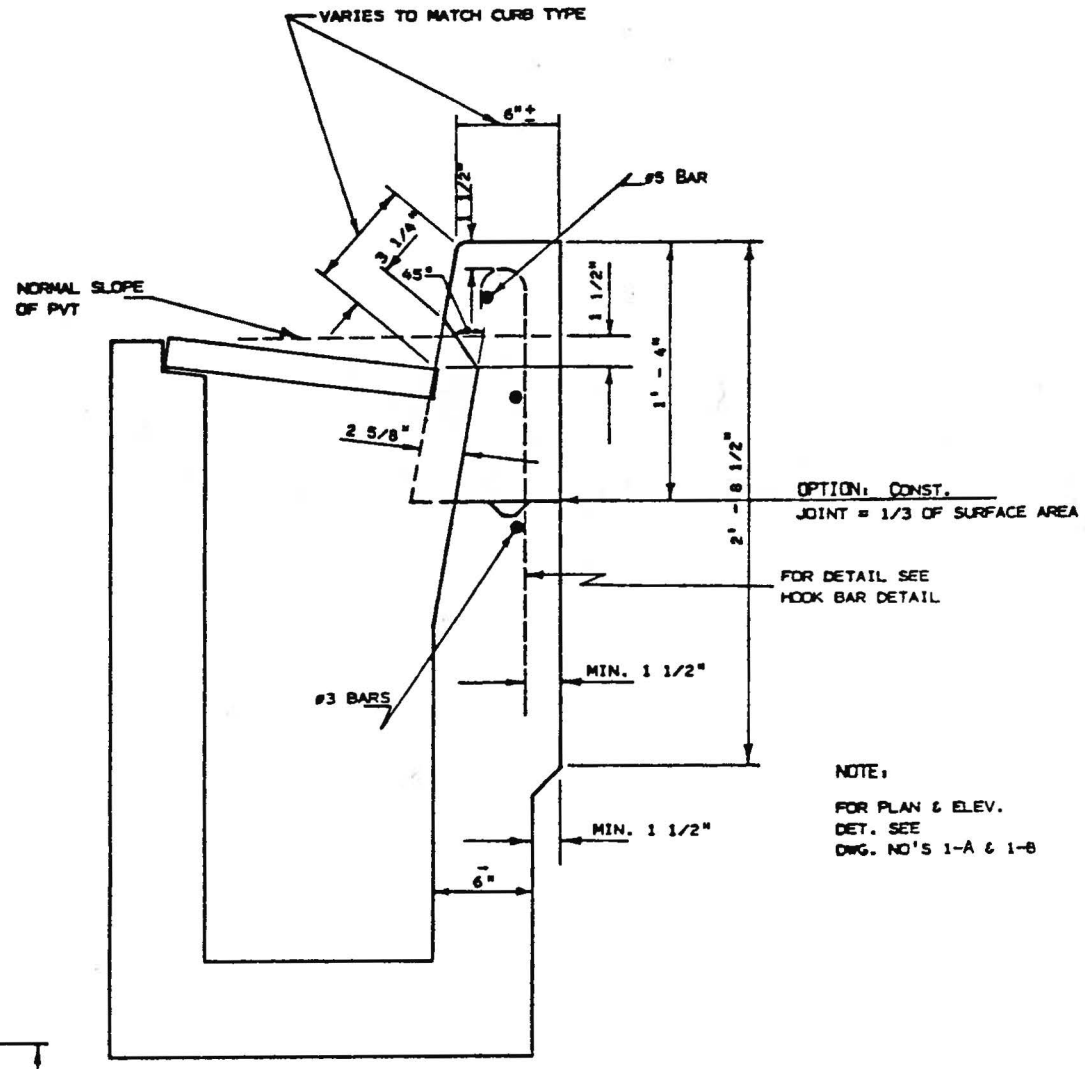

NOTE:

FOR PLAN & ELEV.
DET. SEE
DWG. NO'S 1-A & 1-B

SECTION B-B
RECESSED CURB INLET
ELEVATION

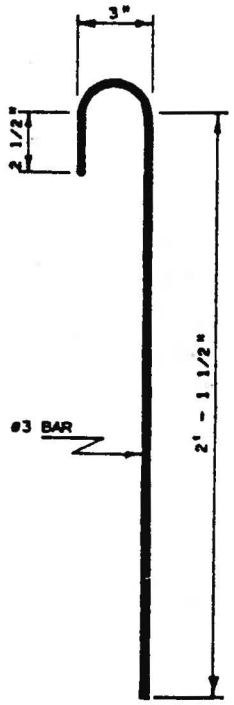

HOOK BAR DETAIL

AMERICAN PUBLIC WORKS ASSOCIATION, OREGON STATE CHAPTER	
RECESSED CURB INLET	
DATE: 6-1-79	DRAWING NO.: 2

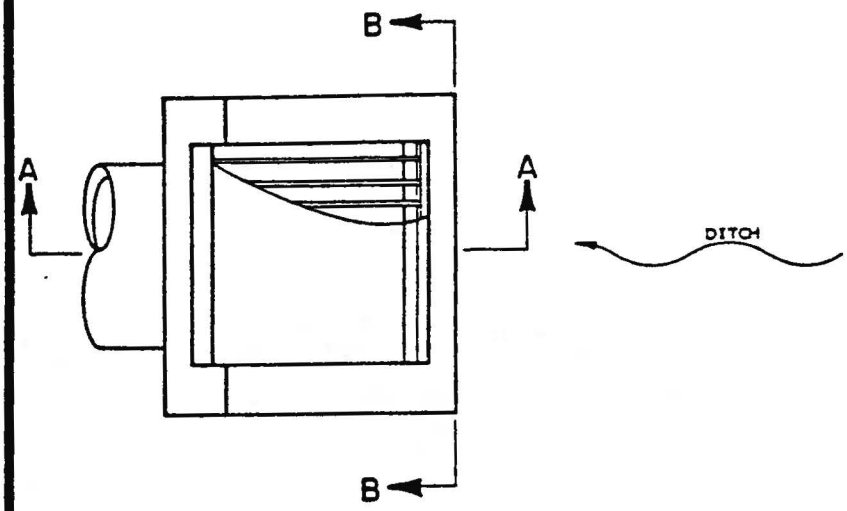

PLAN
AREA DRAIN TYPE II

NOTE:

1. FOR PIPE SIZE - SEE DWG. NO. 1-B.
2. CONC. SHALL ATTAIN A MIN. COMPRESSIVE STRENGTH OF 3000 P.S.I. IN 28 DAYS.
3. FOR FRAME DET. - SEE DWG. NO. 5-A.
   FOR GRATE DET. - SEE DWG. NO. 5-B.

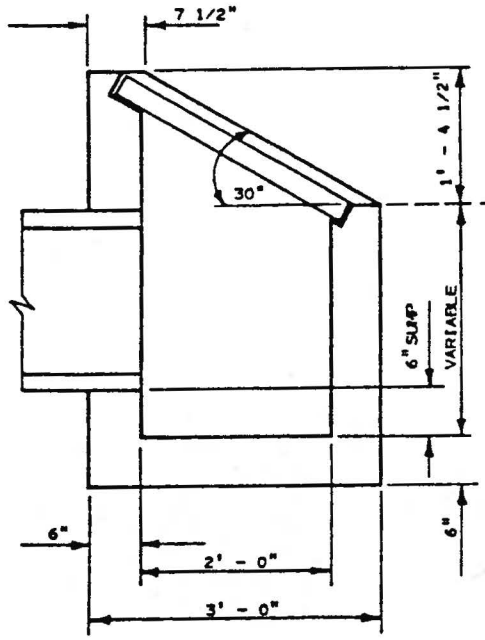

SECTION A-A
ELEVATION

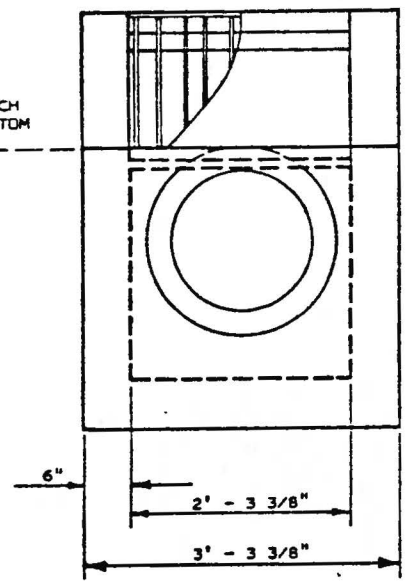

SECTION B-B

AMERICAN PUBLIC WORKS ASSOCIATION, OREGON STATE CHAPTER	
AREA DRAIN TYPE II	
DATE: 6-1-79	DRAWING NO.: 4

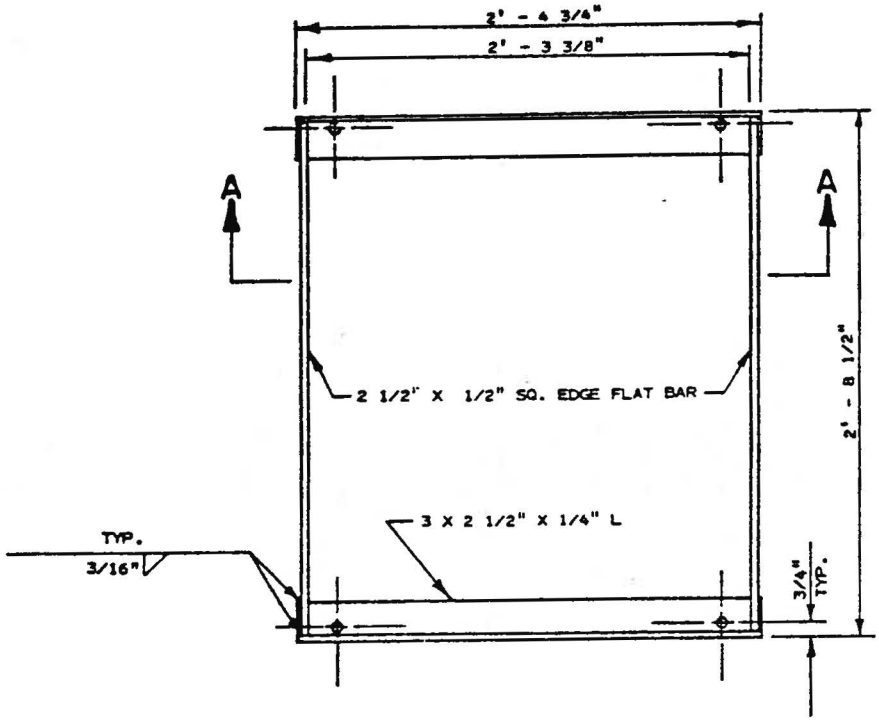

PLAN

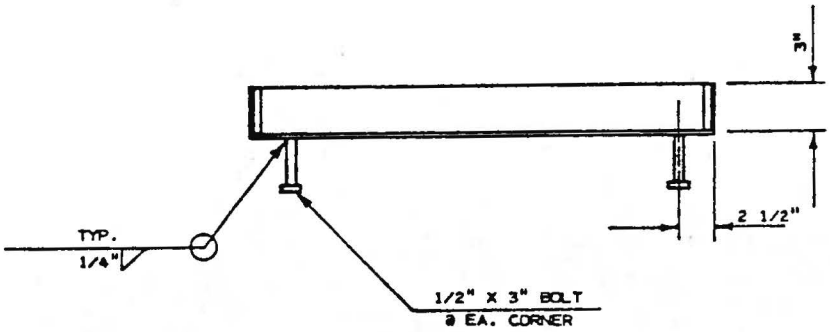

SECTION A-A

AMERICAN PUBLIC WORKS ASSOCIATION, OREGON STATE CHAPTER	
FRAME AREA DRAIN, TYPE II	
DATE: 6-1-79	DRAWING NO.: 5-A

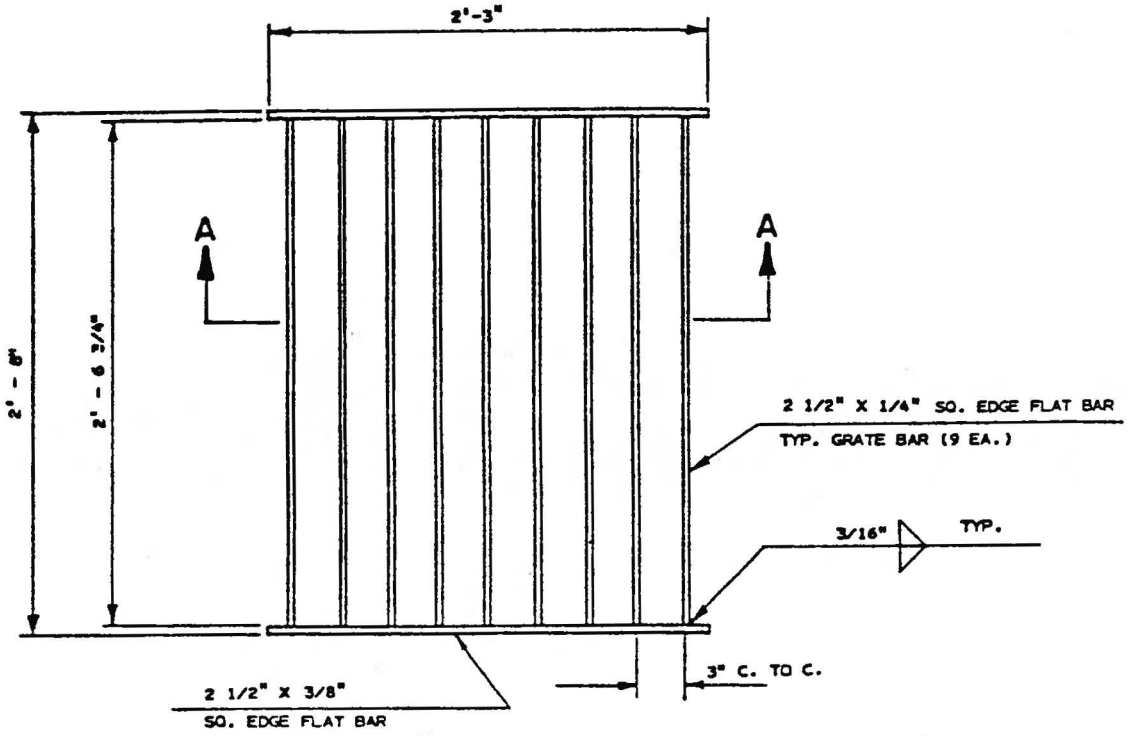

PLAN

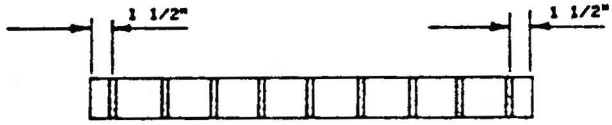

SECTION A-A

AMERICAN PUBLIC WORKS ASSOCIATION, OREGON STATE CHAPTER	
GRATE AREA DRAIN, TYPE I	
DATE: 6-1-79	DRAWING NO.: 5-B

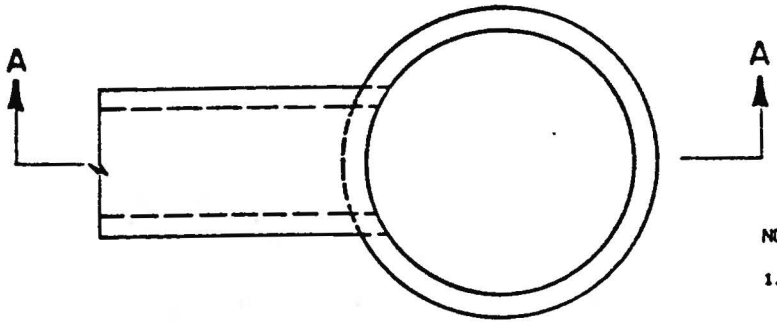

PLAN
AREA DRAIN, TYPE I

NOTES:

1. USE TYPE III CONC. PIPE.
2. 3/4" PREFORMED JOINT FILLER MAT'L. TO BE USED AS SPEC'D. BY ENGR. ONLY IN CONC. PVT. OR GUTTER, & TO EXTEND THROUGH THICKNESS OF CONC.
3. FOR FRAME & GRATE DET. SEE DWG. NO 6-B.

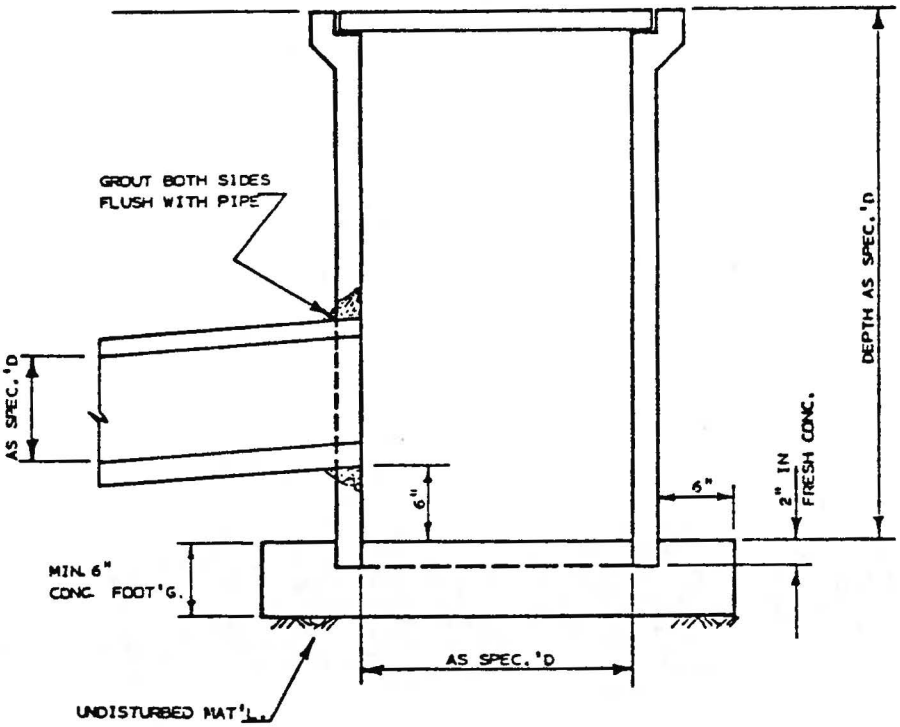

SECTION A-A
ELEVATION

AMERICAN PUBLIC WORKS ASSOCIATION, OREGON STATE CHAPTER	
AREA DRAIN TYPE I	
DATE: 6-1-79	DRAWING NO.: 6-A

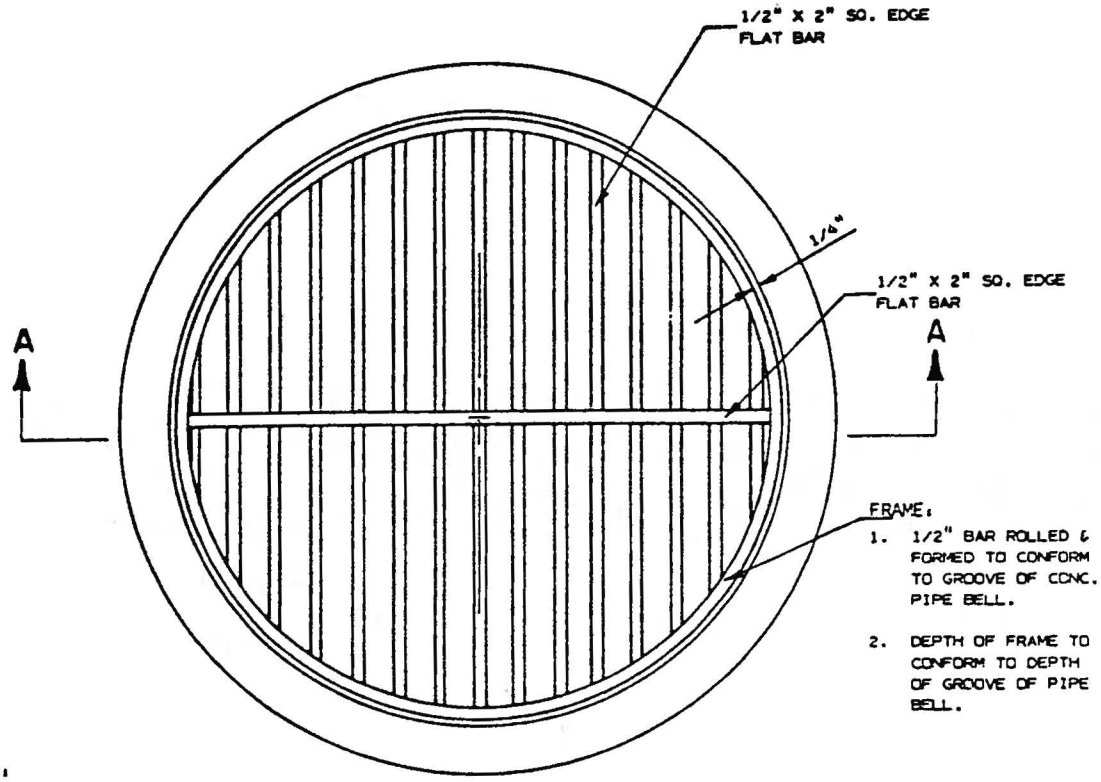

NOTE:

ALL FRAME & BAR JOINTS TO BE WELDED BOTH SIDES.

PLAN

FRAME & GRATE

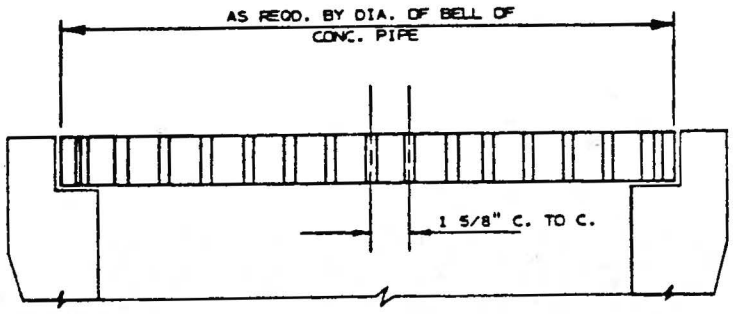

SECTION A-A

AMERICAN PUBLIC WORKS ASSOCIATION, OREGON STATE CHAPTER	
FRAME & GRATE AREA DRAIN, TYPE I	
DATE: 6-1-79	DRAWING NO.: 6-B

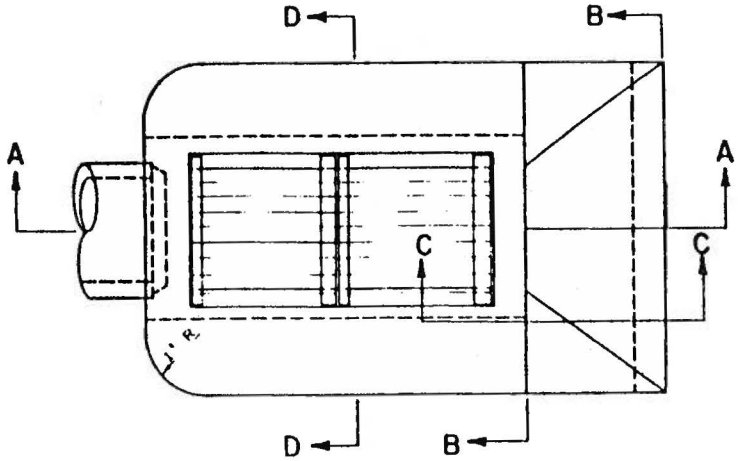

PLAN

GENERAL NOTES:

1. ALL CONC. SHALL BE REINFORCED WITH #4 BARS ON 12" ± CENTERS.
2. ALL REINFORCING STEEL TO BE PLACED MIN. 2" COVER UNLESS OTHERWISE SPECIFIED.
3. ALL SPLICES SHALL BE LAPPED 20 DIA.
4. PLACE PIPE END AS NOTED.
5. MAXIMUM PIPE SIZE: 24" ROUND OR 21" ARCH.
6. CONC. SHALL ATTAIN A MIN. COMPRESSIVE STRENGTH OF 3000 P.S.I. IN 28 DAYS.

NOTE:
FOR FRAME DET. SEE DWG. NO. 8-A.

FOR GRATE DET. SEE DWG. NO. 8-B.

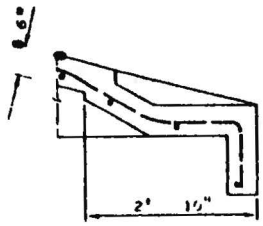

SECTION C-C

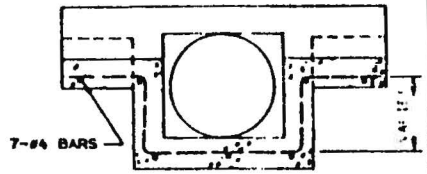

SECTION D-D

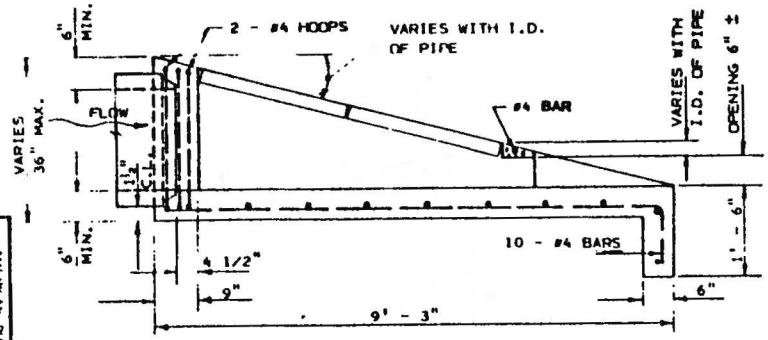

SECTION A-A
ELEVATION

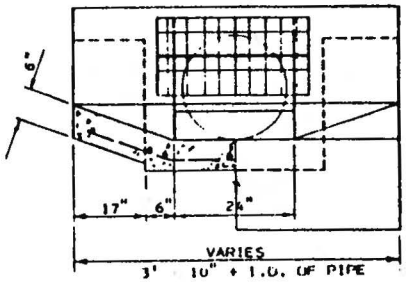

SECTION B-B

DISCHARGE STRUCTURE

DATE 6-1-79

SHEET 7

AMERICAN PUBLIC WORKS ASSOCIATION
OREGON STATE CHAPTER

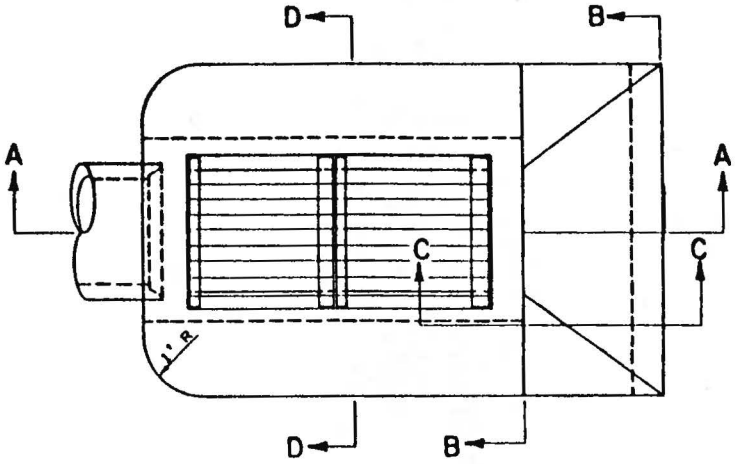

PLAN

GENERAL NOTES:

1. ALL CONC. SHALL BE REINFORCED WITH #4 BARS ON 12" ± CENTERS.
2. ALL REINFORCING STEEL TO BE PLACED MIN. 2" COVER UNLESS OTHERWISE SPECIFIED.
3. ALL SPLICES SHALL BE LAPPED 20 DIA.
4. PLACE PIPE END AS NOTED.
5. MAXIMUM PIPE SIZE: 24" ROUND OR 21" ARCH.
6. CONC. SHALL ATTAIN A MIN. COMPRESSIVE STRENGTH OF 3000 P.S.I. IN 28 DAYS.

NOTE:
FOR FRAME DET. SEE DWG. NO. 8-A.

FOR GRATE DET. SEE DWG. NO. 8-B.

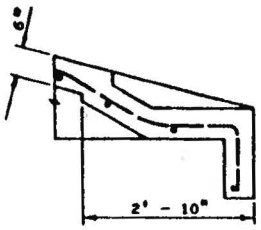

SECTION C-C

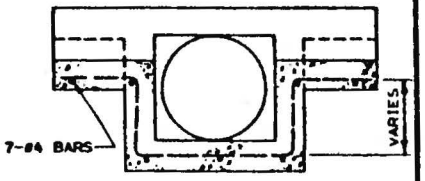

SECTION D-D

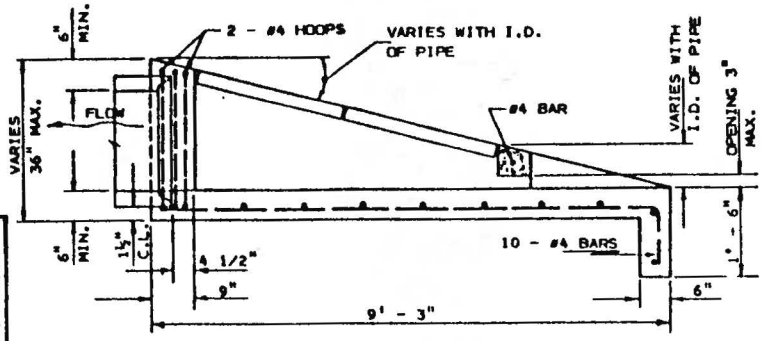

SECTION A-A
ELEVATION

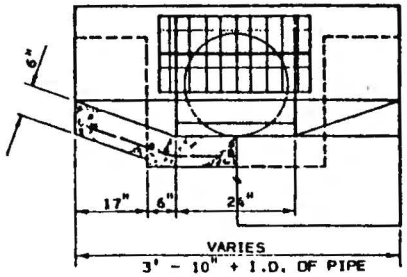

SECTION B-B

AMERICAN PUBLIC WORKS ASSOCIATION
OREGON STATE CHAPTER

INTAKE STRUCTURE

DATE: 6-1-79

NO. 8

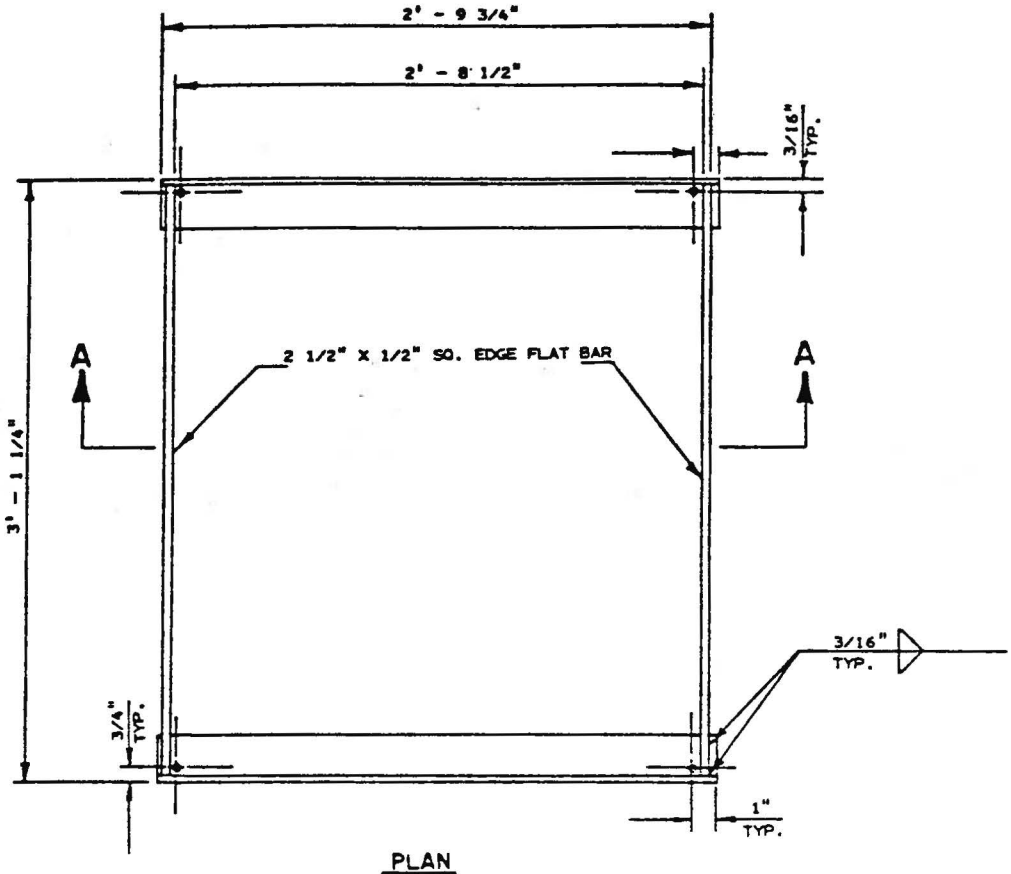

PLAN

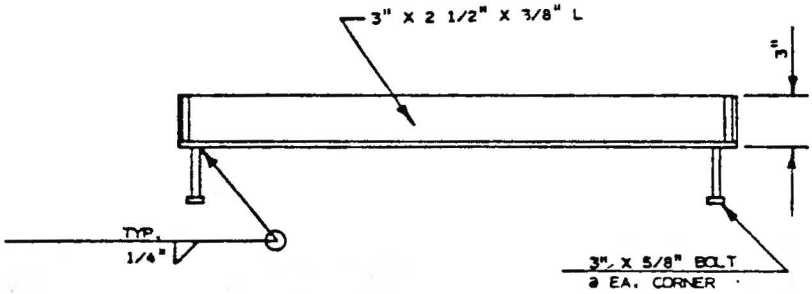

SECTION A-A

AMERICAN PUBLIC WORKS ASSOCIATION, OREGON STATE CHAPTER	
FRAME INTAKE OR DISCHARGE STRUCTURE	
DATE: 6-1-79	DRAWING NO.: 8-A

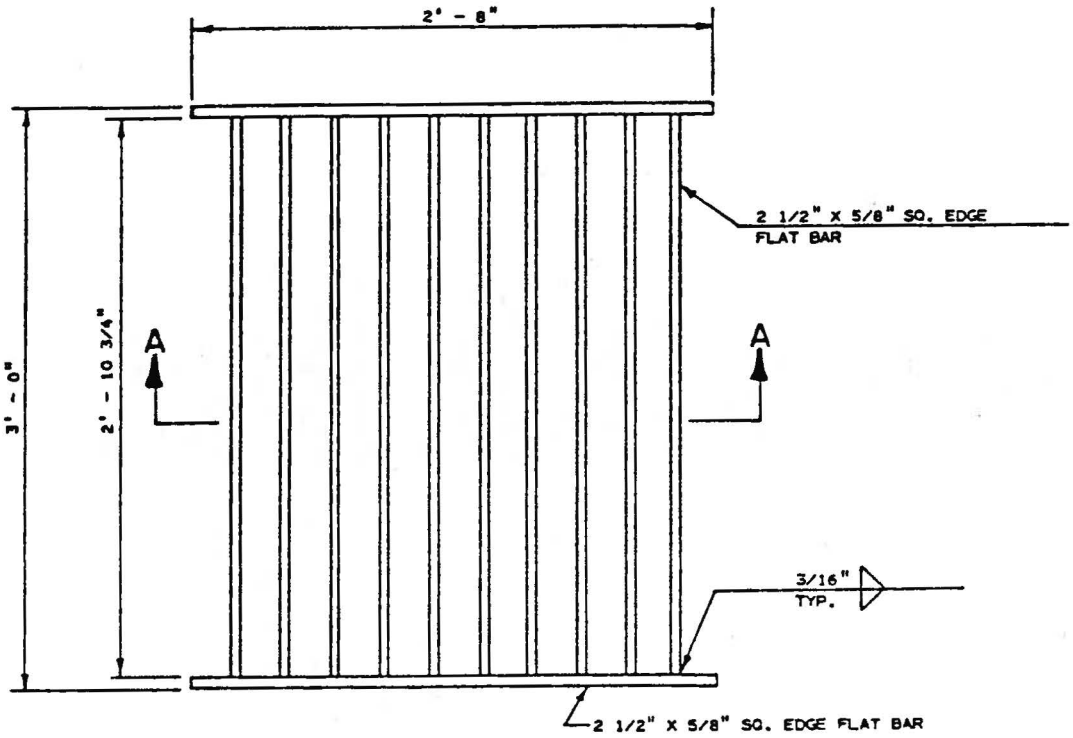

PLAN

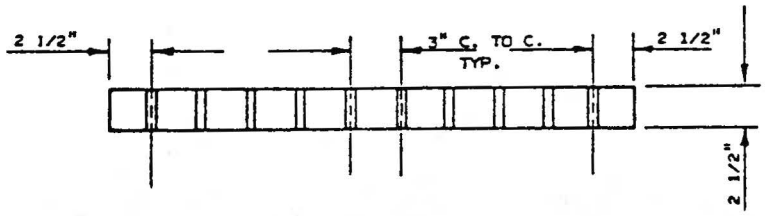

SECTION A-A

AMERICAN PUBLIC WORKS ASSOCIATION, OREGON STATE CHAPTER	
GRATE INTAKE OR DISCHARGE STRUCTURE	
DATE: 6-1-79	DRAWING NO.: 8-B

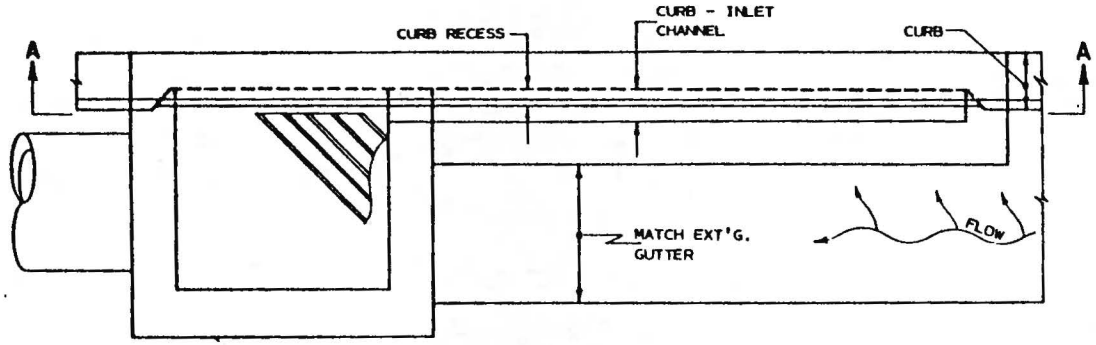

PLAN
CURB INLET TYPE-II

NOTES:

1. FOR CATCH BASIN DET. SEE DWG. NOS'S 1-A & 1-B.
2. FOR REBAR DET. SEE DWG. NO. 9-D.
3. FOR FRAME DET. SEE DWG. NO. 1-C.
4. FOR GRATE DET. SEE DWG. NO.'S 1-D, 1-E, & 1-F.

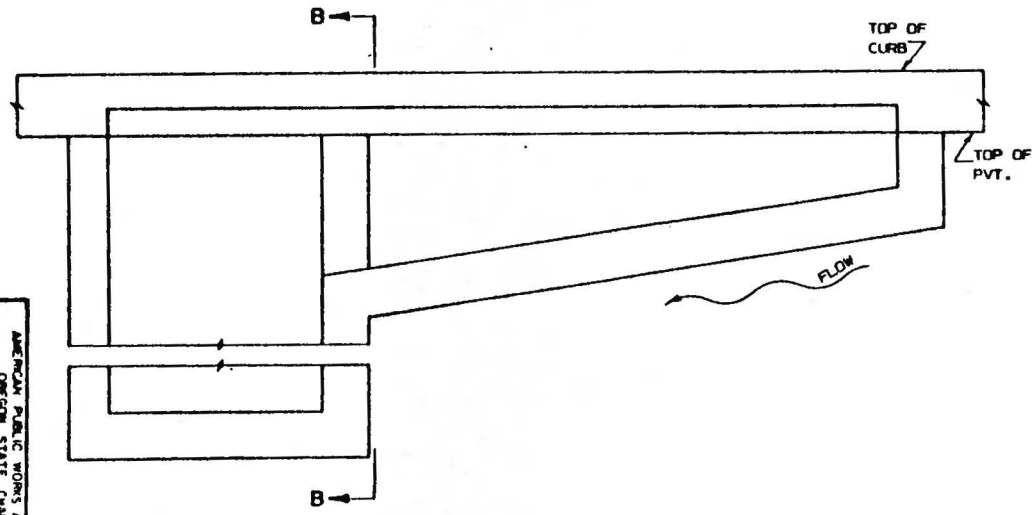

SECTION A-A
ELEVATION

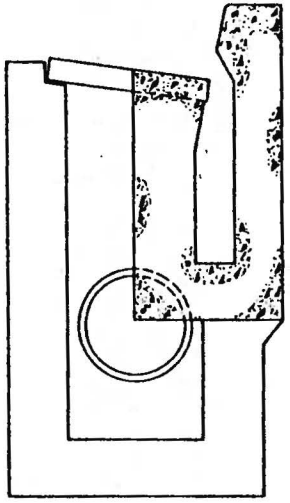

SECTION B-B

AMERICAN PUBLIC WORKS ASSOCIATION
OREGON STATE CHAPTER

CURB INLET
TYPE-II

DATE 6-1-79

DRAWING NO. 9-A

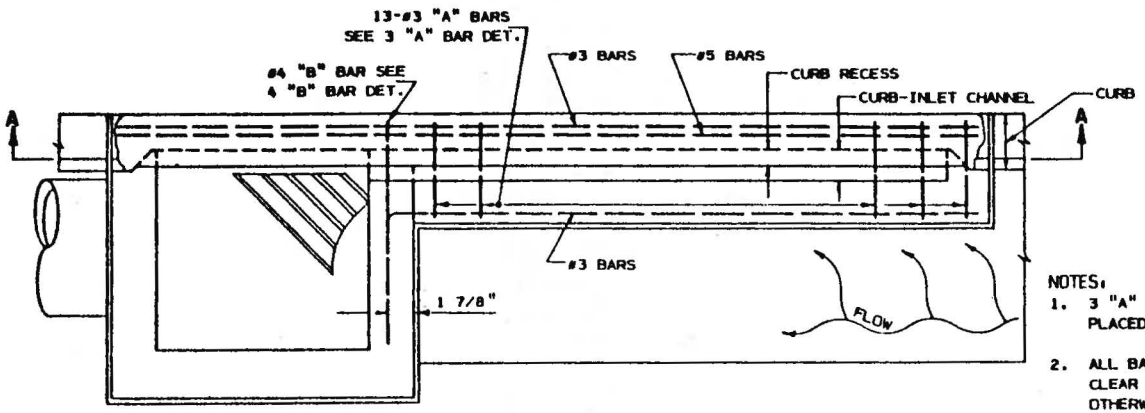

PLAN
CURB INLET TYPE II

NOTES:
1. 3 "A" & "B" TO BE PLACED DURING CURB CONST.
2. ALL BARS TO BE PLACED 1½" CLEAR OF NEAREST FACE UNLESS OTHERWISE NOTED.
3. ALL SPLICES SHALL BE LAPPED 20 DIA.

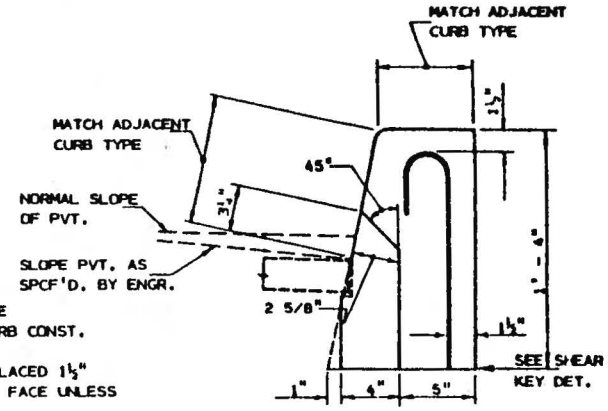

CURB OPENING
DET. C

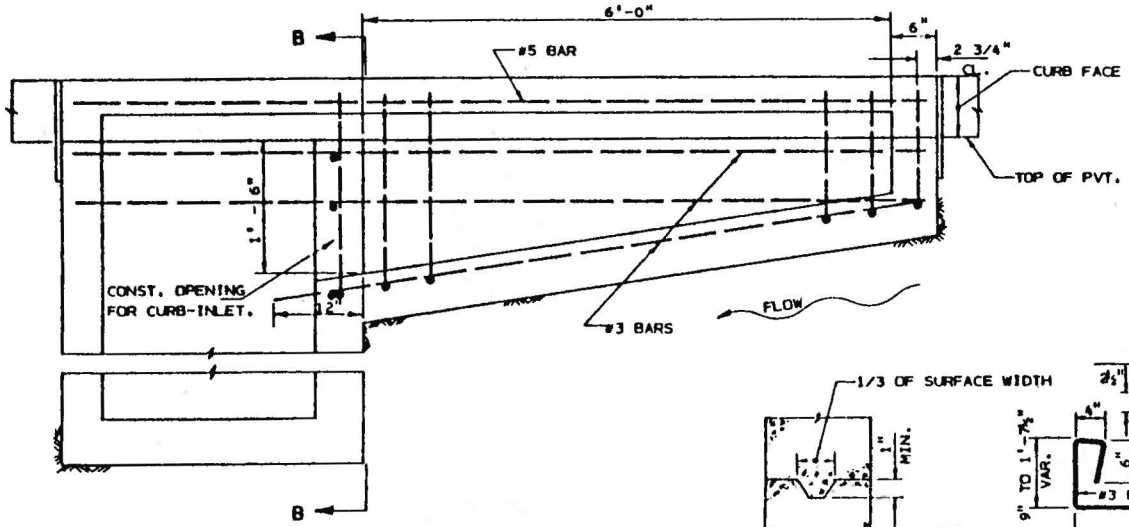

SECTION A-A
ELEVATION

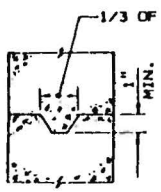

SHEAR-KEY DETAIL

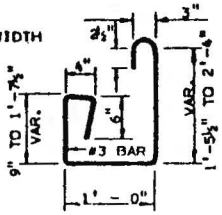

3 "A" BAR DET.

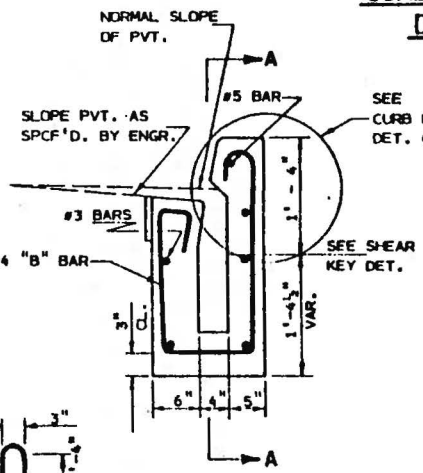

SECTION B-B
CURB & CHANNEL

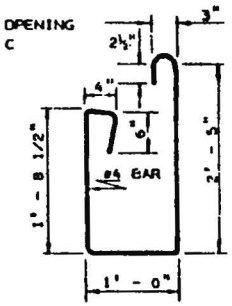

4 "B" BAR DET.

AMERICAN PUBLIC WORKS ASSOCIATION
OREGON STATE CHAPTER

CURB INLET
TYPE II

DATE 6-1-79

DRAWING NO. 9-B

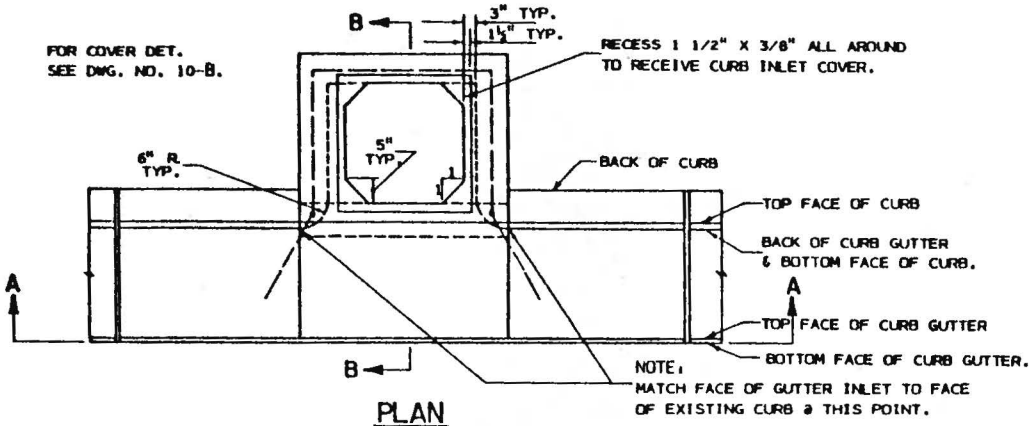

PLAN
GUTTER INLET

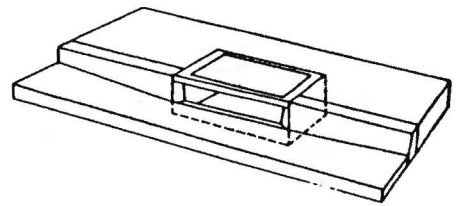

ISOMETRIC VIEW

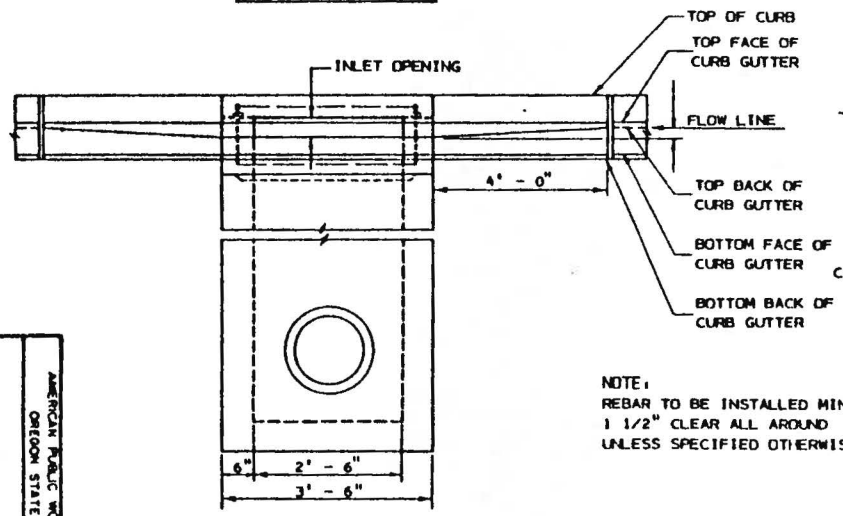

SECTION A-A
ELEVATION

NOTE:
REBAR TO BE INSTALLED MIN.
1 1/2" CLEAR ALL AROUND
UNLESS SPECIFIED OTHERWISE.

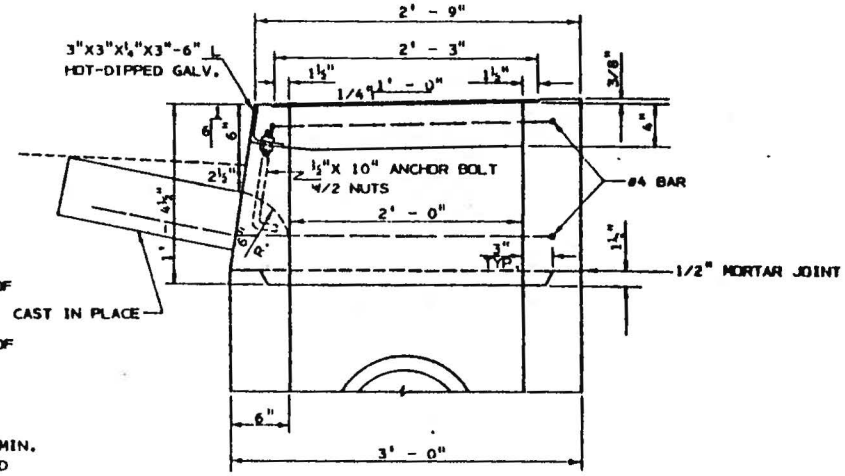

SECTION B-B

AMERICAN PUBLIC WORKS ASSOCIATION OREGON STATE CHAPTER	GUTTER INLET	DATE: 6-1-79
		DRAWING NO. 10-A

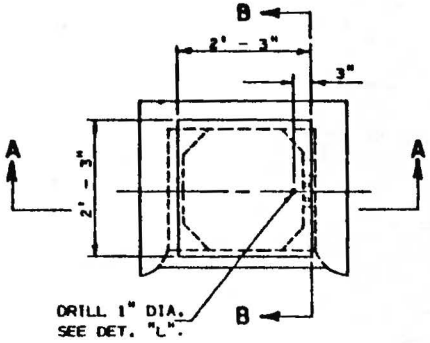

PLAN
GUTTER INLET LID

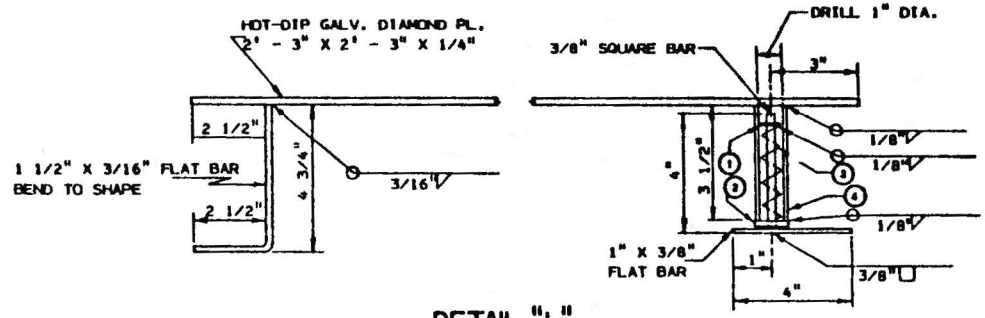

DETAIL "L"
LATCH ASSEMBLIES

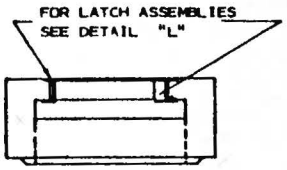

SECTION A-A
ELEVATION

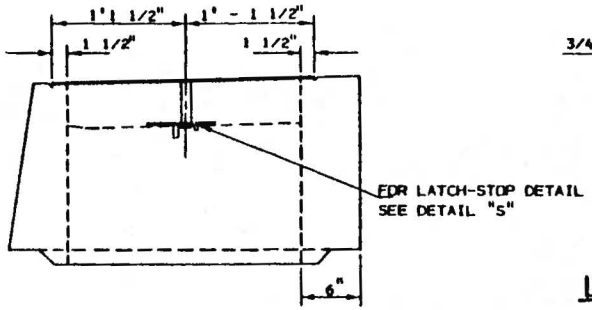

SECTION B-B

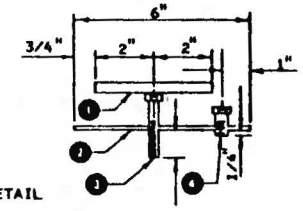

DETAIL "S"
LATCH-STOP DETAIL

1. WASHER USED AS SPRING STOP. WELD WASHER TO 3/8" SQ. BAR, 3/8" FROM END.
2. 1 1/4" DIA. WASHER USED AS TUBE PLUG. WELD TO PIPE.
3. 50 LB. COMP. SPRING
4. 1 1/4" I.D. TUBING

1. 3/8" DIA. ROD, WELD TO BOLT.
2. 1" FLAT BAR, PLACE FLUSH WITH BOTTOM EDGE OF CONC.
3. 3/8" X 2" HEX. HEAD BOLT, WELD TO ℄ OF FLAT BAR.
4. 3/8" X 3/4" HEX. HEAD BOLT, WELD TO ℄ OF FLAT BAR.

NOTE:
ALL FABRICATED METAL PARTS
SHALL BE HOT-DIPPED
GALVANIZED AFTER FABRICATION.

AMERICAN PUBLIC WORKS ASSOCIATION
OREGON STATE CHAPTER

GUTTER INLET COVER

DATE: 6-1-79

PLANSHEET NO. 10-B

MANHOLE DETAILS

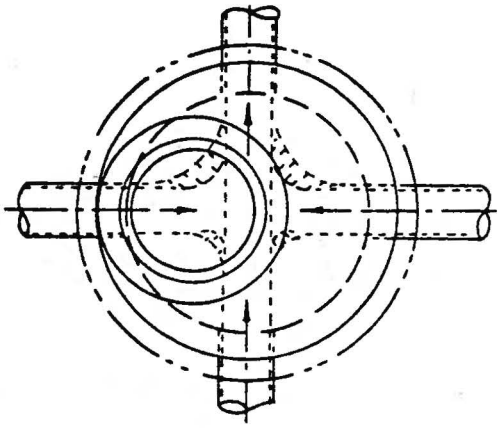

PLAN

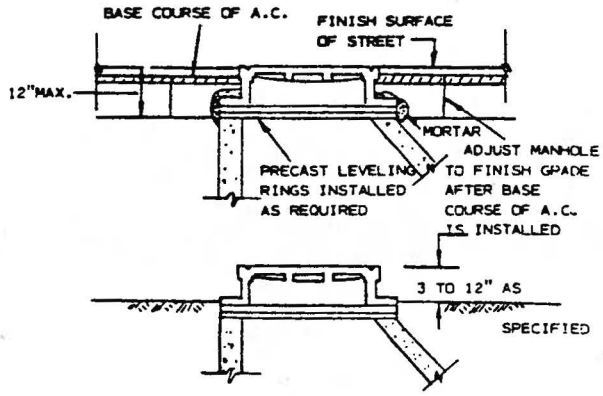

MANHOLE ADJUSTMENT ELEVATION

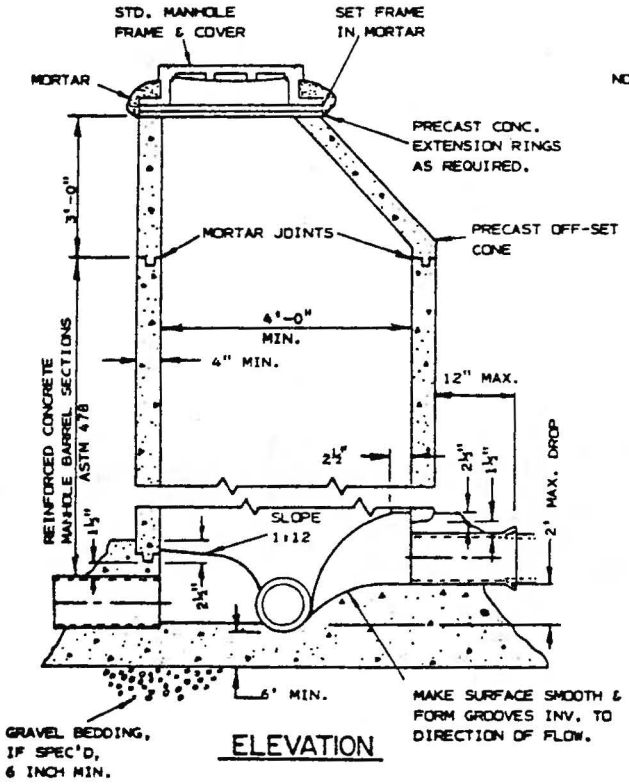

ELEVATION

NOTE: TAMPER PROOF MANHOLE COVERS INSTALLED IN ALL SIDEWALK AREAS, IF SPEC'D.

ALL JOINTS SEALED WITH EITHER RAMS NECK, KENT SEAL, OR NON-SHRINKING MORTAR AS SPEC'D.

INSTALL A BELL JOINT OR A CALDER COUPLING ON ALL PIPES LEAVING THE MANHOLE A MAXIMUM DIST. OF 12 INCHES FROM THE MANHOLE.

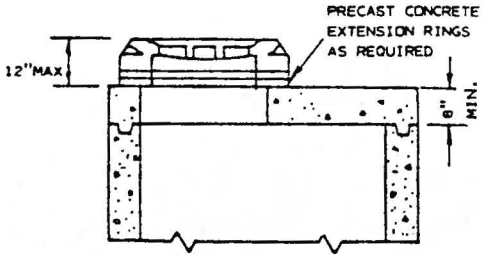

ALTERNATE MANHOLE
REINFORCED FLAT-TOP
ELEVATION

AMERICAN PUBLIC WORKS ASSOCIATION, OREGON STATE CHAPTER	
MANHOLE	
DATE: 4-1-80	DRAWING NO.: 16

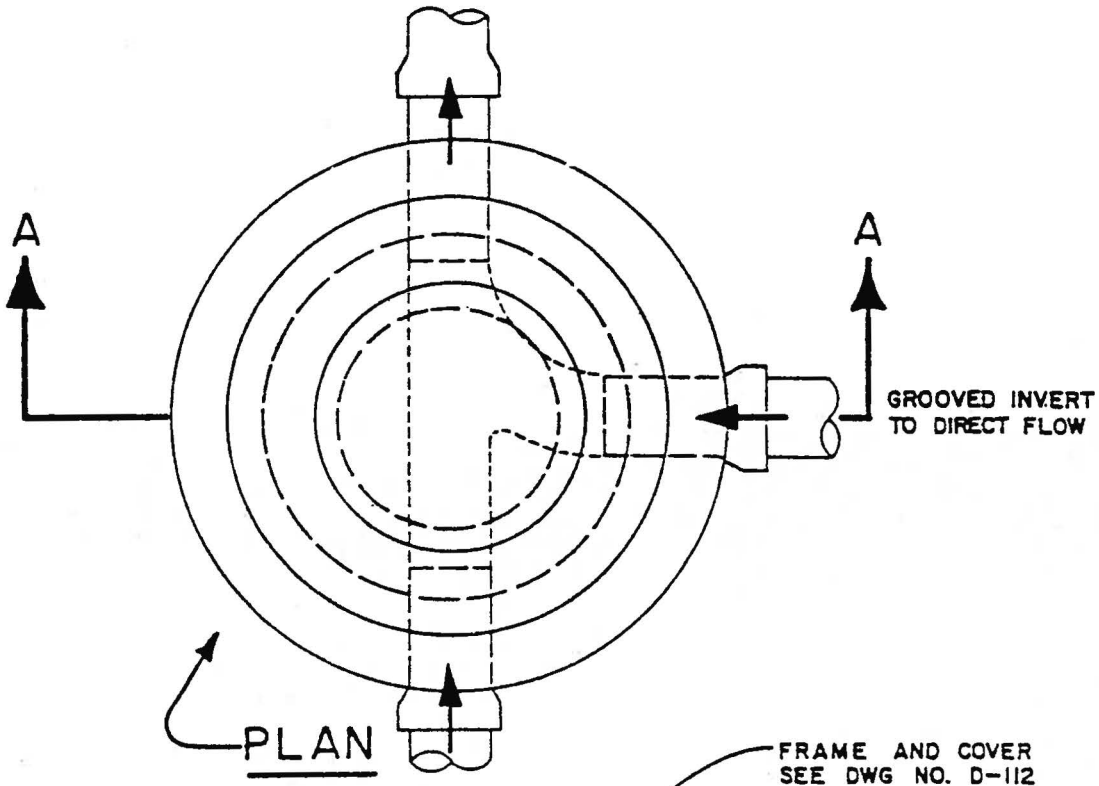

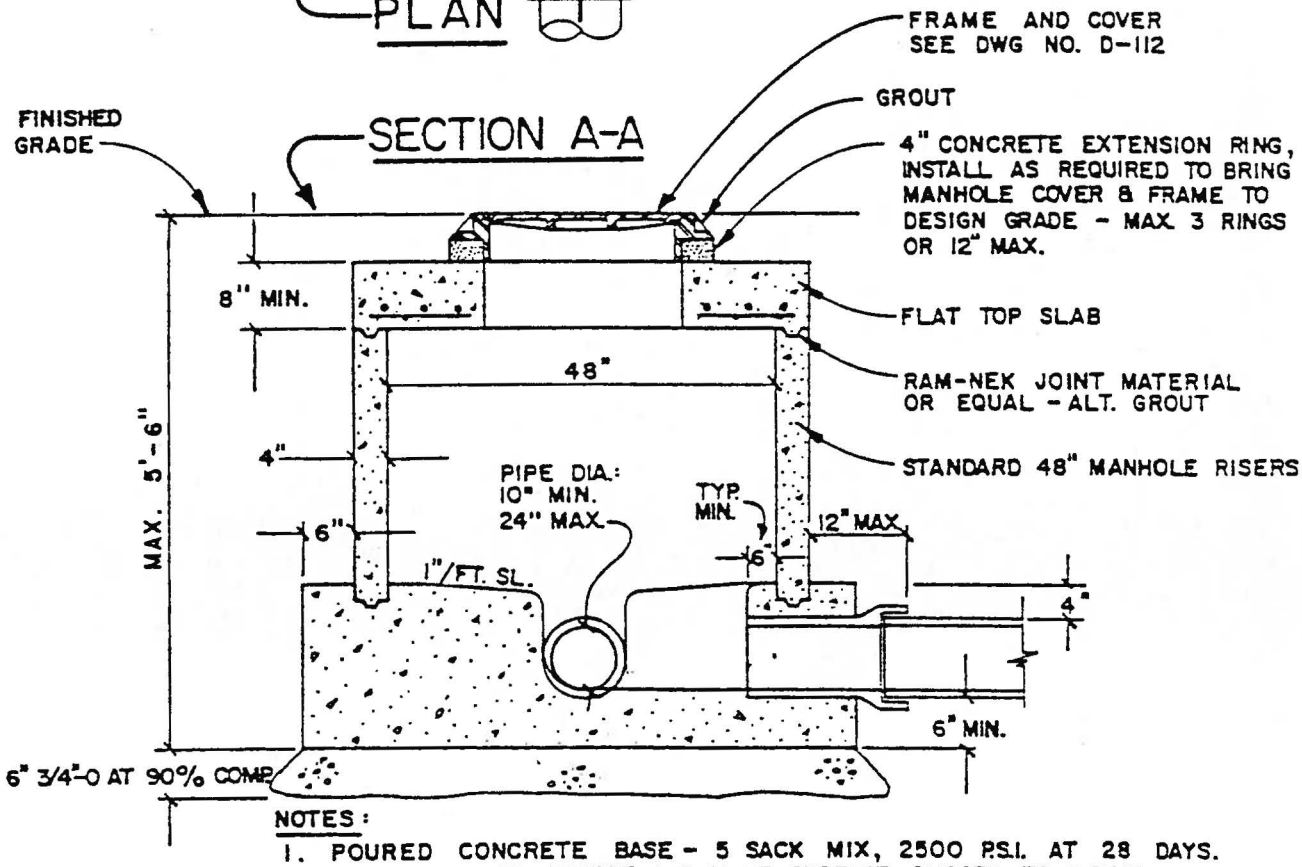

NOTES:

1. POURED CONCRETE BASE - 5 SACK MIX, 2500 P.S.I. AT 28 DAYS.
2. FORM GROOVED INVERT AND MAKE SURFACE SMOOTH TO DIRECT FLOW.

SHALLOW MANHOLE

APWA NO.	TAKEN FROM: WASHINGTON COUNTY DEPARTMENT OF LAND USE AND TRANSPORTATION, STANDARD DRAWING NO. D-110
NONE	

otak incorporated INC. ARCHITECTS, P.C.

17355 S.W. Boones Ferry Rd. Lake Oswego, OR 97035, (503) 635-3618

101 E. 8th Street, Vancouver, WA 98660 (206) 695-0357

NOTES:

1. STANDARD MANHOLE STEPS OR LADDERS SHALL BE INSTALLED.
2. FOR OTHER DETAILS REFER TO WASH. CO. DWG. NO. D-109.
3. SEE DWG. NO. D-112 FOR FRAME AND COVER.

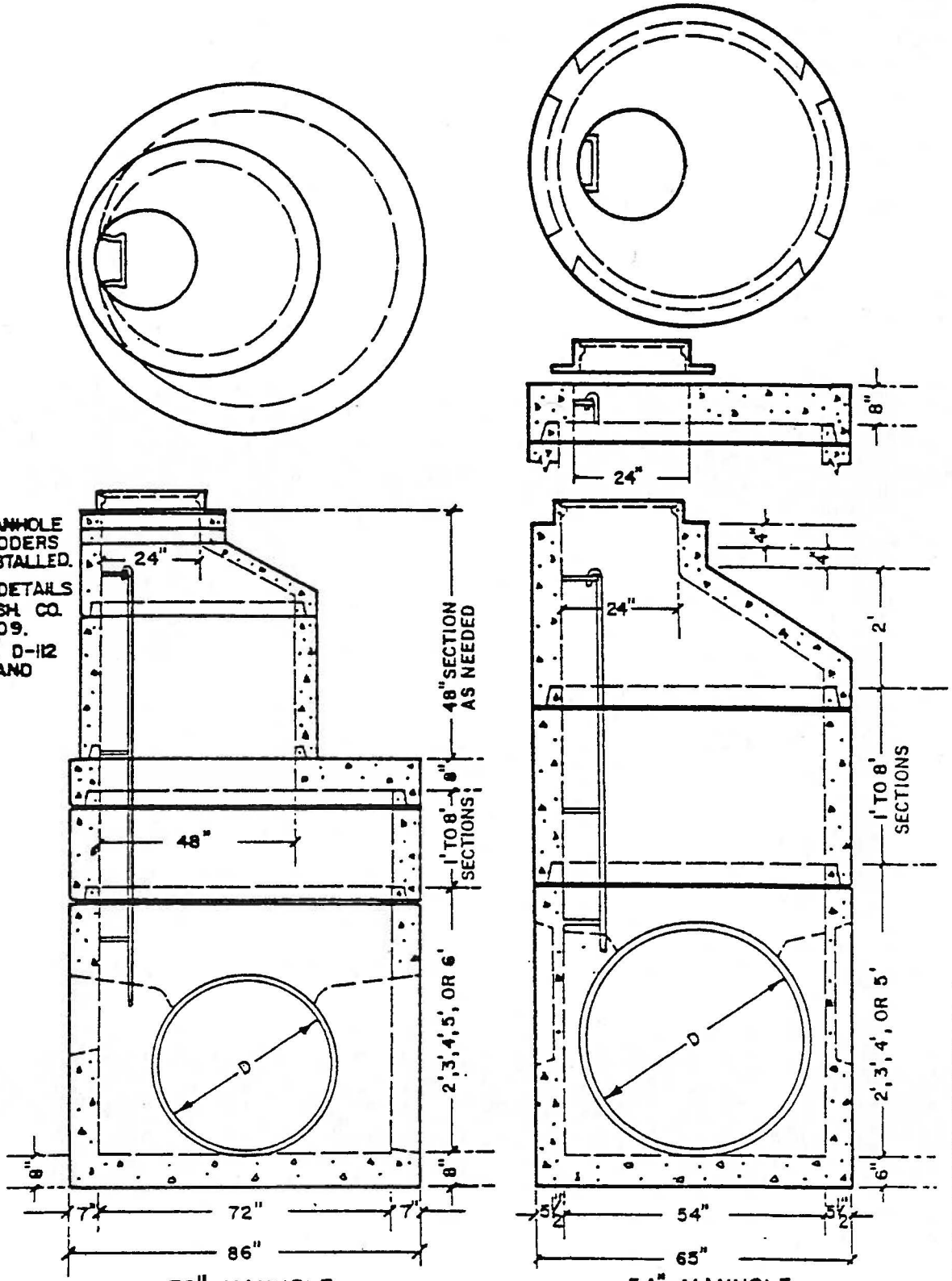

72" MANHOLE

FOR 42" DIAMETER OR ~~SMALLER~~ LARGER PIPE

54" MANHOLE

FOR 36" DIAMETER OR SMALLER PIPE

SPECIAL OVERSIZE MANHOLE

APWA NO.

NONE

TAKEN FROM: WASHINGTON COUNTY DEPARTMENT OF LAND USE AND TRANSPORTATION, STANDARD DRAWING NO. D-111

otak incorporated INC. ARCHITECTS, P.C.

17355 S.W. Boones Ferry Rd. Lake Oswego, OR 97035 (503) 635 3618

101 E. 8th Street, Vancouver, WA 98660, (206) 695-0357

11058 Main Street #215, Bellevue, WA 98004 (206) 455-5340