Stormwater and Grading Design Standards

March 2020

OREGON CITY

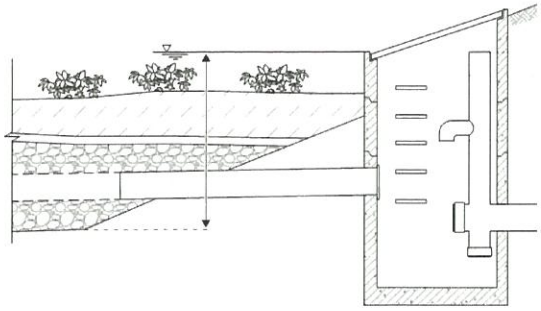

TABLE OF CONTENTS

LIST OF APPENDICES vii

FORWARD viii

ACRONYMNS AND ABBREVIATIONS ix

DEFINITIONS xi

CHAPTER 1. GENERAL INFORMATION

1.1 Purpose of the Stormwater and Grading Design Standards 1-1
1.2 Applicability of the Stormwater and Grading Design Standards 1-1
1.2.1 General Thresholds 1-2
1.2.2 Exemptions 1-3
1.3 General Stormwater Management Principles 1-4
1.4 Stormwater Management Requirements 1-4
1.4.1 General Design Requirements 1-4
1.4.2 Stormwater Management Plan 1-5
1.4.3 Stormwater Site Design Incentives 1-5
1.4.4 Additional Requirements 1-6
1.4.5 Alternative Materials and Methods 1-6
1.4.6 Stormwater Easements 1-6
1.4.7 Operations and Maintenance (O&M) Requirements and Access 1-6
1.5 Jurisdictional Requirements 1-7
1.5.1 Jurisdiction 1-7
1.5.2 Compliance with Laws 1-7
1.5.3 Conflicts 1-7
1.6 Modification Process 1-7
1.6.1 Modification Request Submittal 1-7
1.6.2 Criteria for Modification of Standards 1-7
1.7 Design Professional 1-8
1.7.1 Project Engineer's Responsibilities 1-8
1.7.2 Geotechnical Engineer's Responsibilities 1-9
1.7.3 Landscape Architect's Responsibilities 1-10

CHAPTER 2. SITE ASSESSMENT AND PRELIMINARY DESIGN

2.1 Introduction and Applicability 2-1
2.2 Site Assessment and Preliminary Design Submittal 2-1
2.2.1 Site Information 2-1
2.2.2 Site Assessment 2-2
2.2.3 Site Preliminary Design Objectives 2-3
2.2.4 Stormwater Management Strategy 2-4
2.2.5 Other Project Requirements 2-7

CHAPTER 3. GRADING, FILL, AND EXCAVATION

3.1 Geotechnical Engineering Report 3-1
3.2 Unstable or Steep Slopes 3-1
3.3 Natural Resources Overlay District 3-1
3.4 Excavations 3-1
3.5 Fill and Embankments 3-2
3.5.1 Preparation of Ground 3-2
3.5.2 Fill Material 3-2
3.5.3 Compaction 3-2
3.5.4 Structures 3-3
3.5.5 Stormwater Management Facility Berm Embankments 3-3
3.6 Setbacks 3-4
3.6.1 Top of Cut Slopes 3-4
3.6.2 Toe of Fill Slopes 3-4

CHAPTER 4. STORMWATER MANAGEMENT FACILITY SELECTION AND DESIGN

4.1 Stormwater Management Facility Selection 4-1
4.1.1 Alternate Facilities 4-2
4.2 Design Criteria for Stormwater Management Facilities 4-2
4.3 Design Methods 4-3
4.3.1 BMP Sizing Tool Method 4-4
4.3.2 Pre-developed Hydrology 4-4
4.3.3 Facility Design Adjustments 4-4
4.3.4 Engineered Method 4-5
4.4 Unmitigated Areas 4-6
4.5 Infiltration Rate and Testing 4-6
4.6 UIC Registration 4-6
4.7 Detention Pond Design Requirements 4-7
4.7.1 Geotechnical Report 4-7
4.7.2 Pond Depth 4-7
4.7.3 Bottom Width 4-7
4.7.4 Interior Side Slopes 4-7
4.7.5 Exterior Side Slopes 4-7
4.7.6 Conveyance Outfalls 4-8
4.7.7 Outlet Structures 4-8
4.7.8 Emergency Overflow 4-8
4.7.9 Swales 4-9
4.7.10 Inspection and Maintenance Access 4-9
4.7.11 Signage 4-9
4.7.12 Site Constraints 4-9

4.8 Planting, Irrigation, and Fencing Requirements 4-10
4.8.1 Soil Mixes for Stormwater Management Facilities 4-10
4.8.2 Planting 4-10
4.8.3 Irrigation 4-11
4.8.4 Fencing and Handrails 4-11
4.9 Operation and Maintenance (O&M) Requirements 4-12
4.9.1 General Maintenance Access 4-12
4.9.2 Detention Pond Interior Maintenance Access 4-12
4.9.3 Private Stormwater Facilities 4-13

CHAPTER 5. CONVEYANCE SYSTEM DESIGN

5.1 General Conditions 5-1
5.2 Stormwater Conveyance Requirements 5-2
5.2.1 Points of Discharge 5-2
5.2.2 Onsite Conveyance 5-3
5.2.3 Upstream Drainage Basins 5-3
5.2.4 Downstream Drainage Conveyance 5-3
5.3 Stormwater Conveyance Design Methods 5-4
5.3.1 Design Event 5-4
5.3.2 Design Methodology 5-5
5.3.3 Rational Method 5-5
5.3.4 Hydrograph Method 5-7
5.3.5 Capacity Analysis: Non-pressure Flow 5-8
5.3.6 Capacity Analysis: Pressure Flow 5-11
5.3.7 Hydrologic and Hydraulic Calculation Reporting 5-11
5.4 Open Channels 5-12
5.4.1 Geometry 5-12
5.4.2 Channel Lining and Infiltration 5-12
5.4.3 Open Channel Location 5-13
5.4.4 Check Dams 5-13
5.4.5 Work near Existing Natural Channels 5-13
5.5 Culverts 5-14
5.5.1 Culvert Design Criteria 5-14
5.5.2 Culvert Materials 5-15
5.5.3 Headwalls/Endwalls 5-15
5.5.4 Location 5-15
5.6 Pipe Systems 5-15
5.6.1 General Pipe Design Criteria 5-15
5.6.2 Pipe Material 5-17
5.6.3 Connections to Pipe Systems 5-18
5.6.4 Location 5-18
5.6.5 Storm Drains in Streets or Easements 5-18

5.6.6 Relation to Creeks and Drainage Channels 5-18
5.7 Structures 5-19
5.7.1 Manholes 5-19
5.7.2 Inlet Structures 5-19
5.8 Outfalls 5-20
5.9 Easements and Setbacks 5-21
5.10 Slope Intercept Drains 5-21
5.11 Subsurface Drainage 5-22
5.12 Foundation Drains 5-22
5.13 Design Criteria for Private Stormwater Pumps 5-22

CHAPTER 6. SOURCE CONTROLS

6.1 Introduction and Applicability 6-1
6.1.1 Source Control Triggers 6-1
6.1.2 Goals and Objectives for Source Control 6-2
6.1.3 Request for Alternative Method of Source Control 6-2
6.1.4 Other Applicable Codes or Regulations 6-2
6.2 Requirements for All Sites 6-3
6.2.1 Signage Requirements 6-3
6.2.2 Spill Control 6-4
6.2.3 Public Sanitary Sewer Discharge Permit 6-4
6.2.4 Source Control Submittal 6-4
6.3 Fuel Dispensing Facilities and Surrounding Traffic Areas 6-4
6.3.1 Discharge Permit 6-4
6.3.2 Cover 6-5
6.3.3 Pavement 6-5
6.3.4 Drainage 6-5
6.3.5 Signage 6-5
6.3.6 Pretreatment - Oil/ water separator 6-5
6.3.7 Spill Control Manholes 6-6
6.3.8 Shutoff Valves 6-6
6.3.9 Additional Requirements for Fuel Dispensing Facilities 6-7
6.3.10 Bulk Fuel Terminals 6-7
6.4 Above-Ground Storage of Liquid Materials 6-7
6.4.1 Containment 6-8
6.4.2 Cover 6-8
6.4.3 Pavement 6-8
6.4.4 Drainage 6-9
6.4.5 Shutoff Valves 6-9
6.4.6 Signage 6-9
6.4.7 Additional Requirements 6-9

6.5 Solid Waste Storage Areas, Containers, and Trash Compactors 6-10
6.5.1 Cover 6-10
6.5.2 Pavement 6-10
6.5.3 Isolation 6-10
6.5.4 Signage 6-11
6.5.5 Drainage 6-11
6.6 Exterior Storage of Bulk Materials 6-11
6.6.1 Cover 6-12
6.6.2 Pavement 6-12
6.6.3 Drainage 6-13
6.6.4 Signage 6-13
6.6.5 Shutoff Valves 6-13
6.6.6 Monitoring and Sampling 6-13
6.6.7 Additional Requirements 6-14
6.7 Material Transfer Areas/Loading Docks 6-14
6.7.1 Pavement 6-14
6.7.2 Isolation 6-14
6.7.3 Drainage 6-14
6.7.4 Signage 6-15
6.7.5 Shutoff Valves 6-15
6.7.6 Additional Requirements 6-16
6.8 Equipment and/or Vehicle Washing Facilities 6-16
6.8.1 Cover 6-16
6.8.2 Pavement 6-16
6.8.3 Signage 6-16
6.8.4 Drainage 6-16
6.8.5 Oil Controls 6-17
6.9 Land with Suspected or Known Contamination 6-17
6.9.1 Identifying Contaminated Sites 6-18
6.9.2 Review Process 6-18
6.9.3 Soil Management 6-18
6.9.4 Construction Dewatering 6-19
6.9.5 Post-Construction Drainage Systems 6-19
6.10 Covered Vehicle Parking Areas for Commercial or Industrial Uses 6-20
6.10.1 Drainage 6-20
6.11 Industrial and Commercial High Traffic Areas 6-20
6.11.1 Oil Controls 6-20

CHAPTER 7. EROSION PREVENTION AND SEDIMENT CONTROL
7.1 Introduction 7-1
7.2 General Provisions 7-1
7.3 Applicability 7-2
7.3.1 NPDES 1200-C Permit 7-2
7.4 Erosion and Sediment Control Plan (ESCP) 7-2
7.4.1 General ESCP Principles 7-3
7.4.2 Approved BMPs 7-3
7.4.3 Wet Weather Measures 7-4
7.4.4 Maintenance and Removal of BMPs 7-4
7.4.5 Contaminated Soils 7-4
7.5 Plan Review, Permitting and Approval Processes 7-4
7.5.1 ESC Permitting Process 7-4
7.5.2 ESCP Submittal Requirements 7-5
7.5.3 Inspection Process 7-5

CHAPTER 8. OPERATION AND MAINTENANCE
8.1 Introduction 8-1
8.2 General Requirements 8-1
8.3 O&M Plans 8-1
8.3.1 O&M Plan Development 8-1
8.3.2 O&M Plan Elements 8-2
8.3.3 O&M Plan Review and Approval Process 8-3
8.4 Privately-Owned and Maintained Facilities 8-3
8.4.1 Maintenance Covenant for Private Stormwater Facilities 8-3
8.4.2 Access Easement 8-3
8.4.3 Annual Inspection and Maintenance 8-3
8.4.4 Records of Maintenance Activity 8-4
8.4.5 City Inspection of Stormwater Management Facilities 8-4
8.4.6 Failure to Comply with the O&M Plan 8-4
8.4.7 Modifications to the O&M Plan 8-4
8.5 Publicly-Owned and Maintained Facilities 8-5
8.5.1 O&M Plan 8-5
8.5.2 Modifications to the O&M Plan 8-5
8.5.3 Maintenance Fees 8-5

CHAPTER 9. SUBMITTAL REQUIREMENTS
9.1 Submittal Requirements and Specifications 9-1
9.1.1 Submittal for Land Use Application 9-1
9.1.2 Submittal for Stormwater Management Plan Approval 9-2
9.2 Grading Plan Submittals 9-2
9.2.1 Engineered Grading Plans 9-2
9.2.2 Abbreviated Grading Plans 9-4

9.2.3 Residential Lot Grading Plans 9-5
9.3 Engineered Drainage Plans 9-7
9.3.1 Cover Sheet 9-7
9.3.2 Index 9-7
9.3.3 Scale 9-8
9.3.4 Topographic Plan 9-8
9.3.5 Drainage Improvement Plans 9-9
9.3.6 Plan and Profile 9-10
9.3.7 Construction Notes 9-10
9.3.8 Cross Sections 9-10
9.3.9 Drainage Structure Details 9-11
9.3.10 Erosion Prevention and Sediment Control Plan 9-11
9.3.11 Stormwater Management Facility Grading Plan 9-11
9.3.12 Landscape Plan 9-11
9.4 Drainage Report 9-12
9.4.1 Drainage Report Contents 9-12
9.4.2 Drainage Report Appendices 9-14
9.5 Standard Drawings and Details 9-15
9.6 Plan Review and Approval Processes 9-15
9.7 Construction Considerations 9-15
9.8 Warranty Surety 9-15
9.9 As-built Submittals 9-16

LIST OF APPENDICES

Appendix A. Facility Planting Guidance
Appendix B. Site Assessment and Planning Checklist
Appendix C. Stormwater Facility Design and Maintenance
Appendix D. Infiltration Testing
Appendix E. Manufactured Treatment Technologies
Appendix F. Maintenance Covenant and Access Easement
Appendix G. Historic Vegetation Map
Appendix H. Hydrograph Method Guidelines

FORWARD

Pursuant to Oregon City Municipal Code (OCMC) 13.12.020, these Stormwater and Grading Design Standards have been developed to implement the Stormwater Management standards as outlined in OCMC 13.12.

Stormwater management is a key element in maintaining and enhancing livability within the City of Oregon City (City). There is a direct link between stormwater runoff and the City's surface and ground water quality and quantity. As land is developed, creation of new impervious surfaces and loss of vegetation increases stormwater runoff during rainfall events, altering the natural hydrologic cycle. Without stormwater management, the increase in flows erodes stream channels and limits groundwater recharge. In addition, runoff that flows over roadways, parking areas, rooftops, and other impervious surfaces collects pollutants that are transported within the watershed to streams, rivers, and groundwater resources. Properly managing stormwater is vital to protecting our water resources for a great number of uses, including fish and wildlife habitat, recreation, and drinking water.

The Federal Clean Water Act of 1972 (CWA) established a national commitment to restore and maintain the chemical, physical, and biological integrity of the nation's waters. The CWA prohibits the discharge of pollutants into water of the United States, unless the discharge is in compliance with a **National Pollutant Discharge Elimination System (NPDES) Permit**. The CWA requires cities such as Oregon City to obtain an NPDES permit for discharge from the **Municipal Separate Storm Sewer System (MS4)**. The City's MS4, which is comprised of catch basins, pipes, ditches, stormwater management facilities, and other structures, conveys runoff from private and public properties within the City and drains directly into the Willamette River, Clackamas River, and other local waterways such as Abernethy Creek. The Oregon Department of Environmental Quality (ODEQ) administers the state's NPDES program and issues NPDES permits on the federal government's behalf. The City was reissued its current NPDES MS4 permit in 2012, which requires the City to implement a comprehensive stormwater management program, including establishing controls for stormwater runoff from developing areas.

The City's stormwater management and grading standards, set forth in OCMC 13.12, 15.48, and 17.47 and these Stormwater and Grading Design Standards, emphasize low-impact development (LID) practices, source controls for higher pollutant generating activities, erosion prevention and sediment controls, and operation and maintenance practices designed to properly manage stormwater runoff and protect our water resources. **Each of these measures has been or are being implemented as direct requirements under the City's existing NPDES MS4 permit.**

The goal of these updated standards is to provide local engineers, developers, builders, and City staff clear guidance in planning and designing stormwater conveyance and management systems that are appropriate to the local climate, hydrogeology, and geology. These standards apply to public and private projects throughout the City.

ACRONYMS AND ABBREVIATIONS

2h:1v	two-horizontal to one-vertical
4h:1v	four-horizontal to one-vertical
AASHTO	American Society of State Highway and Transportation Officials
AC	Asphalt Concrete
ADT	Average Daily Traffic
ASTM	American Society of Testing and Materials
BMP	Best Management Practice
cfs	cubic feet per second
City	City of Oregon City
CFR	Code of Federal Regulations
CMP	Corrugated Metal Pipe
CPEP	Corrugated High-Density Polyethylene
CWA	Federal Clean Water Act of 1972
ESC	Erosion and Sediment Control
ESCP	Erosion and Sediment Control Plan
Erosion Standards	*City of Oregon City, Public Works Erosion and Sediment Control Standards*
FEMA	Federal Emergency Management Agency
fps	feet per second
gpm	gallons per minute
HDPE	High-Density Polyethylene
HGL	Hydraulic Grade Line
LID	Low Impact Development
MEP	Maximum Extent Practicable
MS4	Municipal Separate Storm Sewer System
NPDES	National Pollutant Discharge Elimination System
NRCS	Natural Resources Conservation Service
NROD	Natural Resource Overlay District
O&M	Operation and Maintenance
OCMC	Oregon City Municipal Code
ODEQ	Oregon Department of Environmental Quality
ODSL	Oregon Department of State Lands
ODOT	Oregon Department of Transportation
OPC	Oregon Plumbing Code
ORS	Oregon Revised Statutes

OSC	Oregon Structural Code
PC	Point of Curvature
ppm	parts per million
PT	Point of Tangency
PVC	Poly-Vinyl Chloride
RCB	Reinforced Concrete Box
ROW	Right-of-Way
SF	square feet
SPCC	Spill Prevention, Countermeasure, and Containment
SWMM	Stormwater Management Model
SWMP	Stormwater Management Plan
Tc	Time of Concentration
TR-55	Technical Release 55
UIC	Underground Injection Control
USACE	U.S. Army Corps of Engineers
USEPA	U.S. Environmental Protection Agency
USGS	U.S. Geological Survey
WPCF	Water Pollution Control Facility

DEFINITIONS

Applicant – Is any person who applies for an approval and/or permit from the City.

Approved Point of Discharge – A location down slope from a development that the City has deemed adequate to accept stormwater flows from all or a portion of the development area.

BMP Sizing Tool – A computer program, approved by the City, for use in calculating the required size of stormwater management facilities. This tool is limited to a set list of pre-defined stormwater management facilities.

Contractor – A person duly licensed or approved by the State of Oregon to perform the type of work to be done under a permit or contract.

Design Storm – The distribution of rainfall intensity over time, identified to have a probability of recurrence, given in years (i.e., five-year design storm).

Detention – The release of surface water runoff from a site at a slower rate than it is collected by the drainage system, the difference being held in temporary storage.

Development – Any manmade change to improved or unimproved real estate, including but not limited to buildings or other structures, utility infrastructure, streets or other structures or facilities, mining, dredging, paving, filling, or excavation. Development does not include the following: (1) stream enhancement or restoration projects approved by the City; (2) farming practices as defined in ORS 30.930 and farm use as defined in ORS 215.203, except that buildings associated with farm practices and farm uses are subject to the requirements of this chapter.

Director – The City's Public Works Director, or designated representative.

Discharge – Any addition of water, stormwater, wastewater, process water, or any pollutant or combination of pollutants to waters of the State, directly or indirectly, by actions of dumping, spilling, disposing, or physically connecting to the public storm system or natural drainage conveyance.

Drainageway – A natural or manmade channel formed by existing or manmade topography which directs and/or carries surface or stormwater runoff.

Drywell – An approved receptacle used to receive storm, surface, and other water, the sides and bottom being porous, permitting the contents to seep into the ground. A drywell must conform to local agency standards and ODEQ Underground Injection Control standards.

Easement – A permanent or temporary interest or right to lay down, construct, reconstruct, replace, operate, inspect, and perpetually maintain storm drainage or surface water pipelines, and all related facilities through, under, and along a described property, either public or private.

Engineer – A registered professional engineer licensed to practice in the State of Oregon.

Erosion – The visual or measurable movement of soil particles resulting from the flow of, or pressure from, water, wind, or earth movement.

Government Agency – Any municipal or quasi-municipal jurisdiction, County, State, or Federal agency.

Hazardous Materials – Materials described as hazardous by ODEQ, including any toxic chemicals listed as toxic under Section 307(a) of the Clean Water Act or Section 313 of Title III of the Superfund Amendments and Reauthorization Act (SARA).

Highly Erodible – Soils with erosion (K) factors greater than 0.25, as listed in the Soil Survey of Clackamas County Area, Oregon, developed by the Natural Resource Conservation Service.

Hydromodification – The effects of hydrologic changes to the natural environment caused by changes in runoff and/or discharge patterns. These effects include increased erosion of streambanks, increased incision and/or aggradation of stream channels, reduction of high value riparian habitat, impacts to aquatic organisms, and degradation of water quality.

Impervious Surface – A hard surface area which prevents or retards the entry of water into the soil mantle and/or causes water to run off the surface in greater than natural quantities or at an increased rate. Impervious surfaces may include, but are not limited to, rooftops, walkways, patios, driveways, parking lots, concrete or asphalt paving, gravel surfaces with compacted subgrade, packed earthen materials, and oiled macadam or other surfaces which similarly impede the natural infiltration of stormwater. Open, uncovered stormwater management facilities shall not be considered impervious surfaces.

Industrial Waste – Any liquid, gaseous, radioactive, or solid waste substance, or a combination thereof, resulting from any process of industry, manufacturing, trade or business, or from the development or recovery of any sensitive areas, or as defined by ODEQ or the United States Environmental Protection Agency, exclusive of domestic sewage.

Infiltration System – A drainage facility designed to use the hydrologic process of surface and stormwater runoff soaking into the ground to dispose of surface and stormwater runoff.

Inspector – A person authorized by the City, County, or State to enter upon public or private property to inspect construction sites and activities related to these standards.

Intermittent Streams – Streams and springs that consistently do not have year-round water or saturated soil within their channel or swale in a year with wet to average precipitation patterns. Intermittent flow must occur with some degree of regularity and must be in a definite direction. **Section 3.5.3** provides the methodology for determining intermittent status.

Landscape Architect – A registered Landscape Architect licensed to practice in the State of Oregon.

Low Impact Development (LID) – A sustainable site design and development approach that is used to replicate the natural watershed functions and/or address targeted watershed goals and objectives, including protection of existing sensitive areas.

LID Facility – A stormwater facility that mimics natural surface hydrological functions through infiltration or evapotranspiration, or that involves stormwater reuse. Examples of LID facilities are included in **Chapter 4**.

Manufactured Treatment Device – A manufactured device, often proprietary, in which stormwater receives treatment before being discharged to the conveyance system, another stormwater management facility, or to the receiving water. This is a broad category of stormwater management facilities with a variety of pollutant removal mechanisms and varying pollutant removal efficiencies.

Minor Modification – A slight change or alteration made to the standards during the construction phase of a development that does not change the functionality, maintenance, or intent of the standards.

Municipal Separate Stormwater System (MS4) – A conveyance or system of conveyances (including roads with drainage systems, municipal streets, catch basins, curbs, gutters, ditches, manmade channels, or storm drains) as defined in 40 CFR 122.26(b)(8).

National Pollutant Discharge Elimination System, or NPDES, Permit – A permit issued pursuant to Chapter 402 of the Clean Water Act (40 CFR 122, 123, 124, and 504).

NROD – Natural Resource Overlay District – A designation that provides a framework for protection of Metro Titles 3 and 13 lands, and Statewide Planning Goal 5 resources within Oregon City. It is intended to resolve conflicts between development and conservation of habitat, stream corridors, wetlands, and floodplains identified in the City's maps as described in OCMC 17.49.

Owner – The owner(s) of record title or the purchaser(s) under a recorded sale agreement and other persons having an interest of record in the described real property.

Parcel of Land – A lot, parcel, block or other tract of land that may be occupied by a structure or structures or other use and includes yards and other undeveloped areas required under the zoning, subdivision, or other development ordinances.

Perennial Streams – Streams and springs that have year-round water or saturated soil within the channel, in a year with wet to average precipitation patterns. A stream will be considered perennial unless determined to be intermittent using one of the criteria outlined in **Section 3.5.3**.

Permit – Any authorization required pursuant to these standards or any other regulation.

Permittee – The person to whom a building permit, development permit or any other permit described in these standards is issued.

Person – Any individual or legal entity.

Plant Community – A grouping of plants that often occur together growing in a uniform habitat.

Pollutant – Any of the following, but not restricted to: oil, grease, soil, mining waste, spoil, solid waste, incinerator residue, sewage, garbage, sewage sludge, munitions, chemical wastes, biological materials, radioactive materials, heat, heavy metals, asbestos, wrecked or discharged equipment, cellar dirt and untreated industrial, municipal, and agricultural discharges into water.

Porous Pavement – Surface to walk, drive, or park on that may reduce stormwater runoff by allowing water to soak into the ground. Examples are permeable pavers, pervious concrete, porous asphalt, and gravel.

Post-developed Conditions – Conditions after development.

Pre-developed Conditions – The conditions of the land prior to the original development. For the purpose of hydrological evaluations, the pre-developed conditions will use the historical vegetation which existed in the City prior to the original development.

Pretreatment or Treatment – The reduction of the amount of pollutants to the MEP, the elimination of pollutants, or the alteration of the nature of pollutant properties in water to a less harmful state.

Private Storm System – That portion of the storm system owned and/or located outside the public right-of-way.

Public Stormwater System – In general, those portions of the stormwater conveyance systems that are within a dedicated right-of-way or within a public stormwater easement. Public stormwater systems also include those stormwater conveyance systems that are within dedicated right-of-way and permitted by another jurisdictional agency such as ODOT, County, etc.

Public Right-of-Way – A right-of-way on which legal right of passage has been given to the public and is under City, County, State, or Federal jurisdiction.

Redevelopment – See Development.

Retention – The process of collecting and holding surface water runoff from a design storm with no surface outflow.

Retrofit – The creation or modification of an urban runoff management system in a previously developed area. A retrofit can consist of the construction of a new stormwater management facility in a developed area, the enhancement of an existing runoff management structure, or a combination of improvement and new construction.

Sensitive Areas – Sensitive Areas include:

a. Existing or created wetlands, including all mitigated wetlands; limits defined by wetlands reports approved by both the ODSL and/or the City.

b. Rivers, streams, sloughs, swamps, creeks; limits defined by the top of the bank or first break in slope measured upland from the mean high water line;

c. Impoundments (lakes and ponds); limits defined by the top of the bank or first break in slope measured upland from the mean high water line.

Sensitive areas shall not include stormwater management facilities including constructed wetlands, rain gardens, and detention ponds, vegetative buffers adjacent to sensitive areas, or water features, such as lakes, constructed during an earlier phase of a development for specific purposes such as recreation.

Source Control – Stormwater management facilities and/or specific actions taken that attempt to control high risk pollutant loading from entering the stormwater runoff through site activities and site design.

Standards – The adopted principles and policies established by the City to meet the intent of preserving water quality and minimizing the impacts development has on the environment.

Storm Drainage/Storm Sewer – A pipe or drainageway or any method of conveyance that carries stormwater, surface runoff, or drainage.

Stormwater – Waters on the surface of the ground resulting from precipitation.

Stormwater Management – A program to provide surface water quality and quantity controls through structural and nonstructural methods and capital improvement projects. Examples of Structural controls include the facilities included in Chapter 4 of this manual as well as structural source control measures, such as covers and awnings, curbs for isolation, spill control manholes, and shut-off valves described in Chapter 6. Nonstructural controls include maintenance of surface water facilities, public education, water quality monitoring, implementation of intergovernmental agreements to provide for regional coordination, and preparation of water quality control ordinances and regulations.

Stormwater Management Facility – Any structure or drainageway that is designed, constructed, and maintained to collect, filter, retain, or detain surface water runoff during and after a storm event for the purpose of controlling flows and/or reducing pollutants in stormwater runoff. It may include, but is not limited to constructed wetlands, rain gardens, water quality swales, stormwater planters, infiltration systems, and ponds.

Stormwater Management Plan (SWMP) – Proposed stormwater plan approved and/or permitted by the City which provides for storm or surface water infiltration, water quality, and flow control as provided within these standards.

Stream – A surface concentration of flow in a channel or swale in which flow of water occurs either perennially or intermittently. For the purposes of this manual, streams refer to drainageways that are determined to be jurisdictional by ODSL or USACE.

Undue Hardship – Special or specified circumstances that compel an applicant for development to request a modification of these standards so as to avoid an unreasonable or disproportionate burden or obstacle to development. The financial viability of meeting the requirements of these design standards is not in itself a justification of undue hardship.

Vegetated Buffer – A corridor adjacent to a sensitive area that is preserved and maintained to protect riparian area functions. Refer to OCMC Title 17 for dimensions and locations of regulated vegetated buffers.

Vegetated Corridor – See Vegetated Buffer.

Waters of the State – Those waters defined in ORS Chapter 468B.005 or as amended which include lakes, bays, ponds, impounding reservoirs, springs, wells, rivers, streams, creeks, estuaries, marshes, inlets, canals, the Pacific Ocean within the territorial limits of the State of Oregon, and all other bodies of surface or underground waters, natural or artificial, inland or coastal, fresh or salt, public or private (except those private waters which do not combine or effect a junction with natural surface or underground waters), which are wholly or partially within or bordering the state or within its jurisdiction.

Wetland – Areas that are inundated or saturated by surface or groundwater at a frequency and duration sufficient to support, and that under normal circumstances do support a prevalence of vegetation typically adapted for life in saturated soil conditions. Wetlands are those areas identified and delineated by a qualified wetlands specialist as set forth in the Federal Manual for Identifying and Delineating Jurisdictional Wetlands, January 1987, or by an ODSL/USACE 404 permit. Wetlands may also consist of:

a. *Constructed Wetlands.* As defined in Section 404 of the Clean Water Act, constructed wetlands are those areas developed as a water quality or quantity facility, subject to maintenance as such. These areas must be clearly separated from existing or created wetlands.

b. *Created Wetlands.* Created wetlands are those wetlands developed in an area previously identified as a non-wetland to replace or mitigate wetland destruction or displacement.

c. *Existing Wetlands.* Existing wetlands are those identified and delineated as set forth in the Federal Manual for Identifying the Delineating Jurisdictional Wetlands, January 1987, or as amended, by a qualified wetlands specialist.

Wet Pond – A constructed treatment facility where a portion of the facility is dedicated to being an open body of water.

Wet Weather Measures – Erosion prevention and sediment control methods deemed necessary to meet the types of conditions that occur during the wet weather season, as identified in the City's current erosion control manual.

Wet Weather Season – The portion of the year when rainfall amounts and frequency tend to have the most significant effect on erosion prevention and sediment control (October 1 to May 31).

Work Area – Areas of disturbance for activities defined under "Development". Work area includes areas used for storage of equipment or materials that are used for these activities.

Stormwater and Grading Design Standards

CHAPTER 1

General Information

CHAPTER 1. GENERAL INFORMATION

The Stormwater and Grading Design Standards describe requirements and methods for minimizing the impacts of development within the City of Oregon City (City). Implementing these standards will help protect water resources which, in turn, will benefit human health, fish and wildlife habitat, recreational resources, and drinking water.

This chapter describes the purpose, applicability, jurisdictional, and administrative requirements of the Stormwater and Grading Design Standards.

1.1 Purpose of the Stormwater and Grading Design Standards

The purposes of the Stormwater and Grading Design Standards include but are not limited to the following:

A. Meet federal and state National Pollutant Discharge Elimination System (NPDES) Municipal Separate Storm Sewer System (MS4) permitting requirements.

B. Minimize the introduction of pollutants and provide water quality treatment of stormwater runoff to preserve the beneficial uses of drainageways, lakes, ponds, wetlands, and other sensitive areas.

C. Enhance water quality by protecting sensitive areas and the required vegetative buffers.

D. Reduce stormwater runoff volumes and maximize groundwater recharge through the process of infiltration of runoff into vegetated stormwater facilities.

E. Maintain the pre-development stormwater runoff characteristics to minimize effects on the drainageways such as sediment transport, erosion, and degradation generally associated with urbanization, through the use of Low Impact Development (LID) facilities and/or flow controls to address hydromodification.

F. Protect the safety of persons and property by safely conveying all stormwater runoff from site development and preventing the uncontrolled or irresponsible discharge of stormwater onto adjoining public or private property.

G. Provide for orderly development by preserving the drainageways and natural conveyance systems created by the existing topography and creating man-made conveyance systems with adequate capacity for future development upstream.

H. Construct stormwater management facilities which are safe, effective, and economical to maintain and minimize future replacement costs.

I. Provide guidance to designers and engineers in meeting the requirements of stormwater regulations when developing land and constructing infrastructure within the City of Oregon City.

1.2 Applicability of the Stormwater and Grading Design Standards

These standards are intended for use by property owners, developers, and design professionals as general design guidelines for all publicly and privately-owned and maintained stormwater management facilities within the City.

All development, as defined by the City, is subject to the requirements of these standards during the land use decision and permitting processes. These processes generally include all land use proposals, site development, and permit approvals within or proposed to be within City boundaries.

All private storm drains outside the building envelope shall be designed using these standards, along with the Oregon Structural Code (OSC), Oregon Plumbing Code (OPC), and/or other applicable codes as appropriate.

1.2.1 General Thresholds

The site development thresholds and applicability of these standards are as follows:

A. Development activities that result in **5,000 square feet of new or replaced impervious surface,** cumulative over a 5-year period, are subject to the requirements of these standards.

B. Development activities that will result in the **creation of more than 500 square feet of new impervious surface within a natural resource overlay district (NROD)** (as defined by Oregon City Municipal Code [OCMC] 17.49), cumulative over a 5-year period, are subject to the requirements of these standards.

C. Development activities that will **disturb 1,000 square feet of existing impervious surface within an NROD as part of a commercial or industrial redevelopment**, cumulative over a 5-year period, are subject to the requirements of these standards.

D. All development that results in **1,000 square feet of new or replaced impervious surface shall be subject to the erosion prevention and sediment control requirements** outlined in **Chapter 7**.

E. All site **development that results in any new or replaced impervious surfaces and is categorized as high risk for increased pollutant loading** in stormwater runoff is required to comply with **Chapter 6** in addition to all requirements within these standards. High-risk sites, as defined in Chapter 6, include the following site use categories:

- Fuel Dispensing Facilities and Surrounding Traffic Areas
- Above-Ground Storage of Liquid Materials
- Solid Waste Storage Areas, Containers, and Trash Compactors
- Exterior Storage of Bulk Materials
- Material Transfer Areas/Loading Docks
- Equipment and/or Vehicle Washing Facilities
- Development on Land with Suspected or Known Contamination
- Covered Vehicle Parking Areas for Commercial or Industrial Uses
- Industrial and Commercial High-Traffic Areas
- Land Uses Subject to Oregon Department of Environmental Quality 1200-Z Industrial Stormwater Permit Requirements

1.2.2 Exemptions

Projects in the following categories are generally exempt from the requirements of these standards:

A. **Stream enhancement or restoration projects** approved by the City

B. **Farming practices** as defined by Oregon Revised Statutes (ORS) 30.930 and **farm use** as defined in ORS 214.200, except that buildings associated with farm practices and farm use are subject to the requirements of these standards

C. Actions by a public utility or any other governmental agency **to remove or alleviate an emergency condition**

D. **Road and parking area preservation/maintenance projects** such as pothole and square cut patching, surface sealing, mill/resurface or overlaying of existing asphalt or concrete pavement, provided the preservation/maintenance activity does not expand the existing area of impervious coverage above the thresholds listed in **Section 1.2.1**

E. **Pavement reconstruction/rehabilitation projects** located within the public right-of-way that alter the subgrade shall be required to meet water quality and flow control standards for the net new impervious surface created

F. **Pedestrian and bicycle improvements** (sidewalks, trails, pathways, transit stops, multi-modal stops, and bicycle paths/lanes) that are standalone projects where no other impervious surfaces are created or replaced

G. **Underground utility projects** that replace the ground surface with in-kind material or materials with similar runoff characteristics

H. **Maintenance or repair** of existing utilities

I. An exemption to the flow control requirements (see **Section 4.2**) of these standards will be granted when **all** of the following apply:

- The development site discharges directly to the Willamette River, Clackamas River, or Abernethy Creek; and
- That development lies within the 100-year floodplain or is up to 10 feet above the design flood elevation (design flood elevation is equal to 50.7 feet NAVD 88) as defined by OCMC 17.42; and
- The project site must be drained by a conveyance system that is comprised entirely of manmade elements (e.g., pipes, ditches, culverts, outfall protection, etc.) and extends to the ordinary high water line of the exempt receiving water; and
- The conveyance system between the project site and the exempt receiving water shall have sufficient hydraulic capacity and erosion stabilization measures to convey discharges from the proposed conditions of the project site and the existing conditions from non-project areas from which runoff is collected.

1.3 General Stormwater Management Principles

The City restricts the uncontrolled and untreated discharge of pollutants into any stormwater system and/or natural drainageway area. The City's stormwater standards are intended to provide guidance for the reduction of pollutants in stormwater to the Maximum Extent Practicable (MEP).

Stormwater pollutants are generally separated into the following categories: suspended solids (sediment), oxygen-demanding pollutants, bacteria, organic carbon, hydrocarbons, metals (lead, copper, zinc, mercury, and cadmium), nutrients (nitrogen and phosphorous), and pesticides/herbicides.

The most effective method for preserving stormwater quality is preventing pollution of stormwater runoff at the source. Constructed stormwater management facilities are the last line of defense for removing pollutants contained in stormwater runoff.

Stormwater management facilities use a variety of methods to remove pollutants from stormwater, such as infiltration, sedimentation, filtration, plant uptake, ion exchange, adsorption, and bacterial decomposition. Infiltration is the preferred method to address stormwater runoff for water quality and flow control requirements. In some cases, a combination of stormwater management facilities, referred to as a treatment train, may be the most effective strategy for removal of specific pollutants of concern in designated high-risk areas.

In selecting a stormwater management approach, the designer must consider site characteristics, anticipated land uses, runoff characteristics, and treatment objectives. Once the site analysis is complete, the designer may incorporate the most effective stormwater management facilities into the stormwater management plan for the proposed development. See **Chapter 2** for additional details on site assessment and planning and **Chapter 4** for design criteria, design methods, and facility selection and sizing.

1.4 Stormwater Management Requirements

The following requirements apply to all projects:

1.4.1 General Design Requirements

Design of stormwater management plans must include provisions to control runoff adequately from impervious and pervious areas within and upstream of the development without exceeding capacities of available facilities and downstream drainageways. General design considerations are as follows:

A. Surface or subsurface drainage, caused or affected by development, shall not flow over adjacent public or private property in a volume or location significantly different from that which existed prior to development, but shall be collected and conveyed to an acceptable point of discharge as approved by the City.

B. The City generally does not allow the diversion of stormwater from one drainage basin or watershed to another drainage basin or watershed.

C. Surface drainage entering a development from offsite areas shall be intercepted at the naturally occurring locations. Offsite surface drainage shall be conveyed through the site in a separate system and will not be mixed with the stormwater collected and treated in onsite stormwater management facilities unless the onsite storm-

water management facilities are designed to manage the additional flows from the upstream drainage basin(s) assuming full development potential.

D. All public storm drainage systems shall be gravity systems without the use of pumps or other mechanical means to convey or transport stormwater.

E. The point of discharge for all stormwater may be a piped system, curb and gutter, or open channel as approved by the City. All outfalls to an existing or proposed stormwater facility, conveyance system, or drainageway shall be approved by the City.

F. When an approved point of discharge is located on an adjacent private property, the applicant shall be responsible to acquire all applicable downstream private and/or public stormwater easements.

G. In compliance with Oregon Drainage Law, development shall not adversely impact downstream properties. Stormwater runoff from a development shall be safely conveyed to prevent the uncontrolled or irresponsible discharge of stormwater onto adjoining public or private property.

H. The point of discharge for stormwater shall not be the City's sanitary sewerage system, except as provided in **Chapter 6**.

I. No project or development shall directly or indirectly discharge to the public storm system any quantity of stormwater, pollutant, substance, or wash water that will violate the discharger's permit (if one is issued), the City's NPDES MS4 permit, OCMC, or other environmental laws or regulations.

1.4.2 Stormwater Management Plan

All projects that meet the thresholds in **Section 1.2.1** shall prepare a Stormwater Management Plan that addresses the following elements. Each requirement is explained in further detail in the following chapters and sections.

A. Site Assessment and Planning – **Section 2.2**

B. Grading, Fill, and Excavation – **Section 3.1**

C. Stormwater Management Facility Design – **Section 4.2**

D. Stormwater Conveyance – **Section 5.1**

E. Source Controls – **Section 6.1**

F. Erosion Prevention and Sediment Control – **Section 7.1**

G. Operation and Maintenance of Stormwater Facilities – **Section 8.1**

1.4.3 Stormwater Site Design Incentives

Incentive programs are continuously changing and evolving. While the City does not administer an incentive program for stormwater-related design elements, applicants may find that required stormwater facilities can be beneficial in qualifying for incentives or benefits from other agencies. Examples include the Leadership in Energy and Environmental Design program, the Envision Rating System administered by the Institute of Sustainable Infrastructure, Salmon-Safe, Earth Advantage, and the Sustainable Sites Initiative. Information on these programs should be discussed with representatives from the sponsoring agency.

1.4.4 Additional Requirements

The requirements presented in these standards do not exclude or replace the requirements of other applicable codes or regulations, such as the Willamette Basin Total Maximum Daily Load Program, the industrial NPDES permitting program, or any other applicable federal or state regulations or permit requirements.

All development within Federal Emergency Management Agency (FEMA)-regulated streams and floodplain overlay zones shall meet the FEMA floodplain permit approval process requirements and the requirements of OCMC 17.42 through the local planning and building authority.

If it is determined by the City that stormwater management or conveyance facilities, in addition to the onsite facilities required by these standards, are necessary to manage and protect natural resources, municipal infrastructure, and/or private property effectively, the City may require additional facilities or modifications.

1.4.5 Alternative Materials and Methods

Alternative materials and methods for stormwater management will be accepted only if the applicant can demonstrate that the existing standards are not appropriate for a given site and the proposed alternative provides the same or greater level of stormwater management as defined in these standards. Alternate materials or methods not explicitly approved herein will be considered for approval through the modification process outlined in **Section 1.6**. All requests will be evaluated on a case-by-case basis, and approval of alternative materials and methods for one development proposal will not imply an approval under similar circumstances in another proposal.

1.4.6 Stormwater Easements

Drainage easements shall be provided in a proposed development for all stormwater facilities that are not located in public rights-of-way or tracts. Said drainage easements shall be granted to the parties responsible for providing ongoing maintenance of the stormwater facilities.

City-maintained stormwater management facilities, including access roads to said facilities, shall require a public stormwater easement or dedication as described in **Chapter 5** and **Chapter 8**. The stormwater easement shall include access to all stormwater management facilities to accommodate maintenance of the facilities. The owner shall provide the City with all necessary documentation granting such easements. The City will not approve the final construction plans until all public and private easement documents have been completed to the satisfaction of the City.

1.4.7 Operations and Maintenance (O&M) Requirements and Access

Stormwater management facilities that serve a single property owner may be privately maintained. Stormwater management facilities that serve multiple properties (e.g. facilities for residential subdivisions) shall be transferred to public ownership following the 2-year maintenance warranty period. Regardless of ownership, all stormwater management facilities are required to comply with O&M requirements described in **Chapter 8**.

1.5 Jurisdictional Requirements

1.5.1 Jurisdiction

The City may promulgate new or amended policies pertaining to these standards in accordance with any other rules and regulations issued by the City and approved by the governing body.

1.5.2 Compliance with Laws

Conformance with these standards shall not be a substitute for, or eliminate the necessity of, conforming with any and all federal, state, and local laws, ordinances, rules, and regulations which are now, or may in the future, be in effect.

1.5.3 Conflicts

Any provisions or limitations of these standards and any regulation and order adopted pursuant hereto are suspended and supplemented by any applicable federal, state, or local requirements existing or adopted subsequent hereto which are more stringent than the provisions and limitations contained herein, provided, always, that any provision of these standards and policies adopted pursuant thereto which are more stringent than any applicable federal, state, or local requirement shall prevail and shall be the standard for compliance by all properties within the city boundary.

1.6 Modification Process

Modification to the adopted stormwater standards may be requested in accordance with OCMC 16.12 and 13.12.100 using the following process.

1.6.1 Modification Request Submittal

Requests to modify the stormwater standards shall be submitted in writing to the City and include the following:

A. The desired modification(s).

B. The reason(s) for the request(s).

C. A comparison between the specification(s) and standard(s) and the modification(s) for performance, function, maintainability, safety, etc.

D. References to regional and/or national accepted standards, record of successful use by other agencies, or other supportive information.

E. It is the responsibility of the applicant to obtain all approvals from any federal, state, or local entity that has authority over or is responsible for permitting of the activities before proceeding with an approved modification.

1.6.2 Criteria for Modification of Standards

The City may grant a modification to the adopted standards when the use thereof does not compromise public safety, environmental protection, or the intent of the stormwater standards and any one of the following conditions are met:

A. The standard is deemed not applicable for the particular application.

B. Topography or other geographic conditions impose an environmental or safety concern and an equivalent alternative exists, which can accomplish the same design intent as provided in these standards.

C. A minor change to the standard is required to address a specific design or construction problem which, if not enacted, will result in an undue hardship.

D. The proposed modification is in the public interest and requirements for safety, function, appearance, and maintainability based on sound engineering and technical judgment are fully met.

E. The financial viability of meeting the requirements of these design standards is not in itself an adequate justification for granting a modification of the standards.

1.7 Design Professional

Much of the information covered in this document is addressed to professional engineers. In order to assist the professional engineer in fulfilling his/her responsibilities related to a development project, the following comments address the City's expectations regarding the responsibilities of the project engineer and other design professionals.

1.7.1 Project Engineer's Responsibilities

All engineering plans, reports, or documents must be stamped and signed by a professional civil engineer registered in the State of Oregon. The project engineer is responsible for reviewing any proposed improvements or modifications to the existing storm drain system with City staff prior to commencement of design work to determine any special requirements and whether the proposal is permissible.

When specifically indicated in this document, some submittals do not require the approval or stamp of a professional engineer. These include but are not limited to the site assessment and planning checklist, the use of the BMP Sizing Tool to size stormwater facilities, and the design of planting plans.

The project engineer's responsibilities include:

A. The project engineer shall prepare construction plans for site development meeting City standards. The engineer shall remain responsible for the accuracy, completeness, and scope of all work submitted to the City. The project engineer shall be responsible for correcting all deficiencies, when necessary, should errors, omissions, or inaccurate data due to the engineer's work come to the City's attention in the future. The project engineer shall be responsible for any damages resulting from the incorrect work.

B. The project engineer shall incorporate recommendations from geotechnical engineering reports and any other engineering recommendations into the construction plans for site development.

C. The project engineer shall, when required by the City, be responsible for the inspection and approval of the construction within the engineer's area of technical expertise. This responsibility shall include, but need not be limited to, construction observation and approval as to the establishment of line, grade, maintenance, and implementation of Best Management Practices (BMP) and drainage of the develop-

ment area. In conjunction with the execution of this responsibility, copies of any on-site inspection reports shall be submitted by the engineer to the City, when so requested. Inspection under this paragraph means the visual observation and documentation of the construction of the stormwater system and BMPs as compared to the approved plans, specifications, and City standards.

D. The project engineer shall act as the coordinating agent in the event the need arises for liaison between the owner, other professionals, contractors, the City, and other agencies.

E. The project engineer shall be responsible for the preparation of revised plans and the submittal of as-built plans or record drawings, as applicable upon completion of work.

F. The project engineer shall be responsible for verification of excavation and embankment quantities, detention pond volumes, slope steepness, and compliance with approved construction plans.

G. Approval of plans and issuance of permits by the City does not in any way relieve the project engineer of his/her responsibility to meet all requirements of the City or other affected jurisdictions, or the obligation to protect the life, health, and property of the public. The design for any project must be revised or supplemented at any time it is determined or suspected by the City or the engineer of record that the full requirements of the City were not met.

1.7.2 Geotechnical Engineer's Responsibilities

When a geotechnical investigation report is required, the minimum responsibilities of the geotechnical engineer shall be as follows:

A. The preparation of any required geotechnical investigation report.

B. All reports, field data, test data, and recommendations shall be submitted to the project engineer and to the City Engineer.

C. The geotechnical engineer shall provide infiltration testing when required, following the requirements in Appendix D.

D. The geotechnical engineer shall provide, when required by the project engineer or the City Engineer, professional inspection and approval concerning the preparation of ground to receive fills and testing for required compaction. The geotechnical engineer shall also provide oversight on stability of all finished slopes and the design of embankment fills.

E. The geotechnical engineer shall prepare, when required by the project engineer or the City Engineer, a final soils report which includes locations and elevations of field density tests. The final soils report shall also include summaries of field and laboratory tests and other substantiating data and comments on any changes made during site development.

1.7.3 Landscape Architect's Responsibilities

When plans for a proposed stormwater management facility are prepared by a licensed landscape architect, the landscape architect shall prepare construction plans for site development meeting the standards and requirements of this document. The landscape architect shall be responsible for correcting all deficiencies, when necessary, should errors, omissions, or inaccurate data due to the landscape architect's work come to the City Engineer's attention in the future. The landscape architect shall be responsible for any damages resulting from the incorrect work.

CHAPTER 2

Site Assessment and Planning

CHAPTER 2. SITE ASSESSMENT AND PRELIMINARY DESIGN

The Stormwater and Grading Design Standards are intended to guide site-specific stormwater management improvements. Strategies for meeting the requirements in these standards depend on a number of site factors including soil infiltration capacity, available infrastructure, and proposed development plans. To use these standards effectively, applicants must demonstrate an understanding of the development site conditions and the upstream and downstream impacts resulting from the proposed development and the required stormwater management improvements.

2.1 Introduction and Applicability

This chapter describes the process for preparing the Site Assessment and Preliminary Design submittal, the first step in meeting the City of Oregon City's (City) stormwater management requirements. The *Site Assessment and Preliminary Design Checklist* (**Appendix B**) should be completed and submitted to the City as part of the Land Use Application. Refer to **Submittals (Chapter 9)** for additional information. **The Site Assessment and Preliminary Design submittal is required for all development that meet or exceed General Thresholds listed in Section 1.2.1.**

The purpose of the site assessment and preliminary design requirements is to ensure that the physical attributes of the development site are reviewed before placing manmade structures such as streets, parking lots, and buildings. This is meant to optimize site design of stormwater management techniques and sensitive areas protection, and to reduce or eliminate potential conflicts between site development elements and required stormwater management systems. A layout that integrates site attributes to manage stormwater and protect habitat may reduce the number, size, and cost of stormwater facilities required for the site.

2.2 Site Assessment and Preliminary Design Submittal

The Site Assessment and Preliminary Design submittal will include the completed checklist from **Appendix B**, site assessment maps, preliminary site plan, preliminary facility sizing documentation, and supporting materials as described below.

2.2.1 Site Information

Provide the requested site information in the checklist, with reference to supporting documentation and maps as appropriate for the site. The following should be included:

A. Applicant contact Information

B. Project location, including whether the site is located within the Oregon City Municipal Code (OCMC) 17.49, Natural Resource Overlay District, US Geologic Hazard Overlay Zone as defined by OCMC 17.44, and/or the Flood Management Overlay District as defined by OCMC 17.42

C. Project type

D. Size of site and amount of proposed impervious area

2.2.2 Site Assessment

Applicants must inventory conditions on and adjacent to the site to learn how stormwater moves through the site and how natural hydrologic functions may be protected and preserved. The information must be presented on a Site Assessment Map at a standard engineer scale appropriate for analyzing the information.

The site assessment should follow the order depicted in **Figure 2-1**. The following describes each assessment item in detail.

A. Topography

Steep slopes greater than 25 percent and setback areas around those steep slopes, as well as landslide zones, are subject to additional requirements and restrictions under OCMC 17.44. Infiltration is not allowed on steep slopes and slide-prone areas. **Infiltrating stormwater on moderate slopes (10 percent or greater) requires a geologist or geotechnical engineering analysis to determine the appropriate strategies.**

B. Soils and Seasonal High Groundwater

Use soil maps, which are available from the Natural Resources Conservation Service Soil Survey to determine the site hydrologic soil type (an indication of soil infiltration capacity). An assessment of the seasonal high water table may be required to ensure the functionality of the system.

C. Infiltration Assessment

Stormwater management facility sizing is based on tested infiltration rates. See **Appendix D** for specific infiltration testing requirements and methods.

D. Hydrology – Site Conditions and Natural Features

Show natural and manmade drainage features including channels, pipes, and outfalls. Identify jurisdictional wetland(s) (per Oregon Department of State Lands and U.S. Army Corps of Engineers) or 100-year floodplain (per Federal Emergency Management Agency [FEMA] mapping) present on the site.

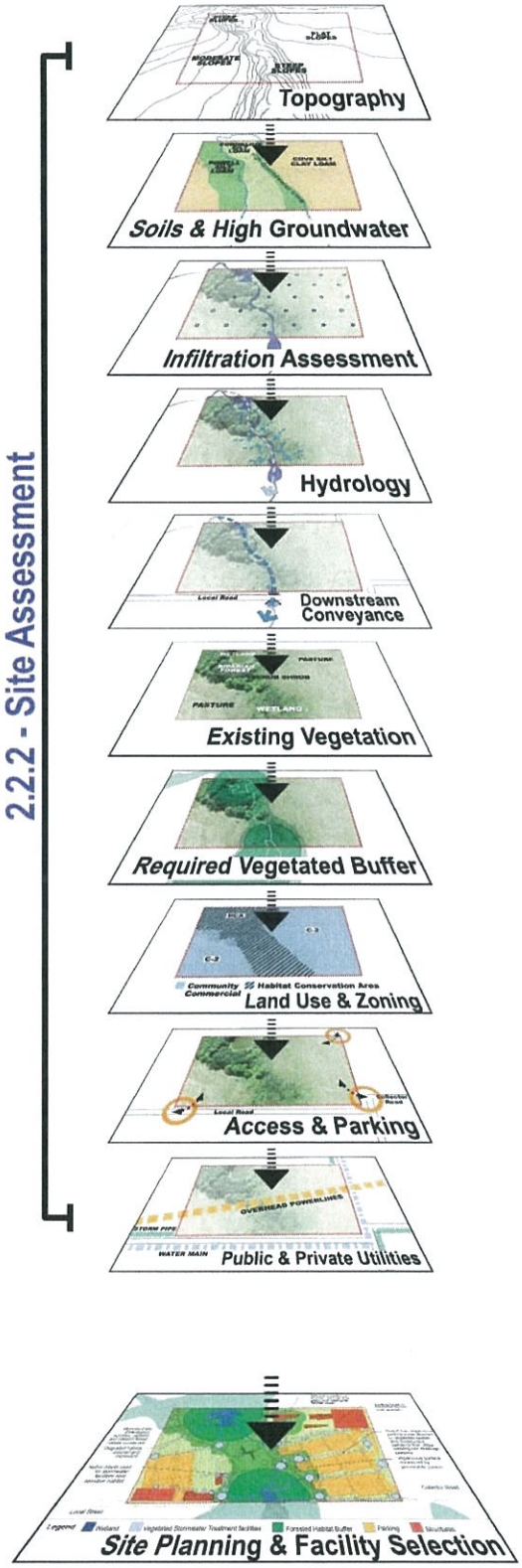

Figure 2-1.
Site Assessment Process

E. Downstream Conveyance

Document the existing and proposed points of discharge for stormwater runoff leaving the site. See **Chapter 5** for downstream analysis requirements and attach the required documentation to this submittal package.

F. Existing Vegetation

Using aerial photos or survey, map all trees and vegetation. Show all existing trees on the site assessment map and mark areas of other vegetation types (e.g., shrubs, pasture). Native trees and vegetation should be protected whenever possible.

G. Required Vegetated Buffers

Document required vegetated buffer areas (per OCMC Title 17). Show required buffer areas on the Site Assessment Map.

H. Land Use and Zoning

Document the existing zoning, including any special overlay zones and/or special districts.

I. Access and Parking

Map proposed access points for all modes of transportation.

J. Public and Private Utilities

Map existing public and private utilities on the site and surrounding areas, including storm, sewer, water, wells, dry wells, onsite septic system, electricity, phone/cable, and gas.

2.2.3 Site Preliminary Design Objectives

Prepare a Preliminary Site Plan at an engineer scale appropriate to review the information that includes proposed grading, clearing areas, stormwater facilities, natural resource areas and required setbacks, buildings, parking areas, streets and other proposed impervious areas. The Preliminary Site Plan must address the four objectives listed below to reduce the impact of stormwater runoff from development, which may reduce the size of stormwater facilities required.

1. Preserve Existing Resources

   Required actions: On the Preliminary Site Plan, show sensitive areas and required buffers and setbacks. Show areas that require enhancement. If encroachment into any vegetated buffer area is proposed, show the area of encroachment on the site map and show related proposed mitigation areas. Refer to OCMC Title 17 to identify any other buffer, conservation, or setback requirements.

2. Minimize Site Disturbance

   Required actions: Protecting undisturbed, uncompacted areas from construction activities provides more rainfall interception, evapotranspiration and runoff rate attenuation than clearing and replanting, even with soil amendments. On the Preliminary Site Plan, identify areas that will not be cleared during construction.

3. Minimize Soil Compaction

   Required actions: Avoid any construction activity that could cause soil compaction in areas designated for stormwater management facilities to preserve filtration and infiltration characteristics of the soil. Also avoid soil compaction in vegetated buffers, and mitigation and/or re-vegetation areas. Delineate these areas on the Preliminary Site Plan and protect during construction with orange construction fencing.

4. Minimize Imperviousness

   Required actions: Document the proposed impervious areas for the site. Consider the use of impervious area reduction strategies such as porous pavement and/or green roofs to reduce the net impervious area proposed for the site. Impervious area reduction strategies will reduce the impervious area requiring stormwater management facilities. Identify proposed impervious area reduction methods and show them on the Preliminary Site Plan.

2.2.4 Stormwater Management Strategy

Given suitable site and soil conditions, the City requires that the stormwater management strategy prioritize infiltration of stormwater runoff to recharge groundwater and mimic pre-development hydrologic conditions. A geotechnical report may be required to document onsite soil conditions in order to determine the appropriate stormwater management strategy.

Stormwater management facilities shall be designed to meet the water quality and flow control standards in **Chapter 4**. Facilities must be sized according to the design requirements in **Chapter 4**, utilizing either the BMP Sizing Tool or the Engineered Method as described in Section 4.3.2.

Figure 2-2 shows the City's Stormwater Management Hierarchy that should be used in selecting the proposed stormwater management strategy. Applicants must demonstrate that the strategies higher on the hierarchy are not feasible before selecting a lower level strategy for stormwater management. **The financial viability of constructing onsite stormwater facilities is not sufficient justification to move to a stormwater management strategy lower on the hierarchy.** The applicant must demonstrate that the proposed development site has one or more of the physical limitations listed in Section 2.2.4.1.

For development sites located entirely within a Geologic Hazard area, a stormwater management facility with a surface area equivalent to ten percent of the total new and replaced impervious surfaces will be considered the maximum extent practicable (MEP).

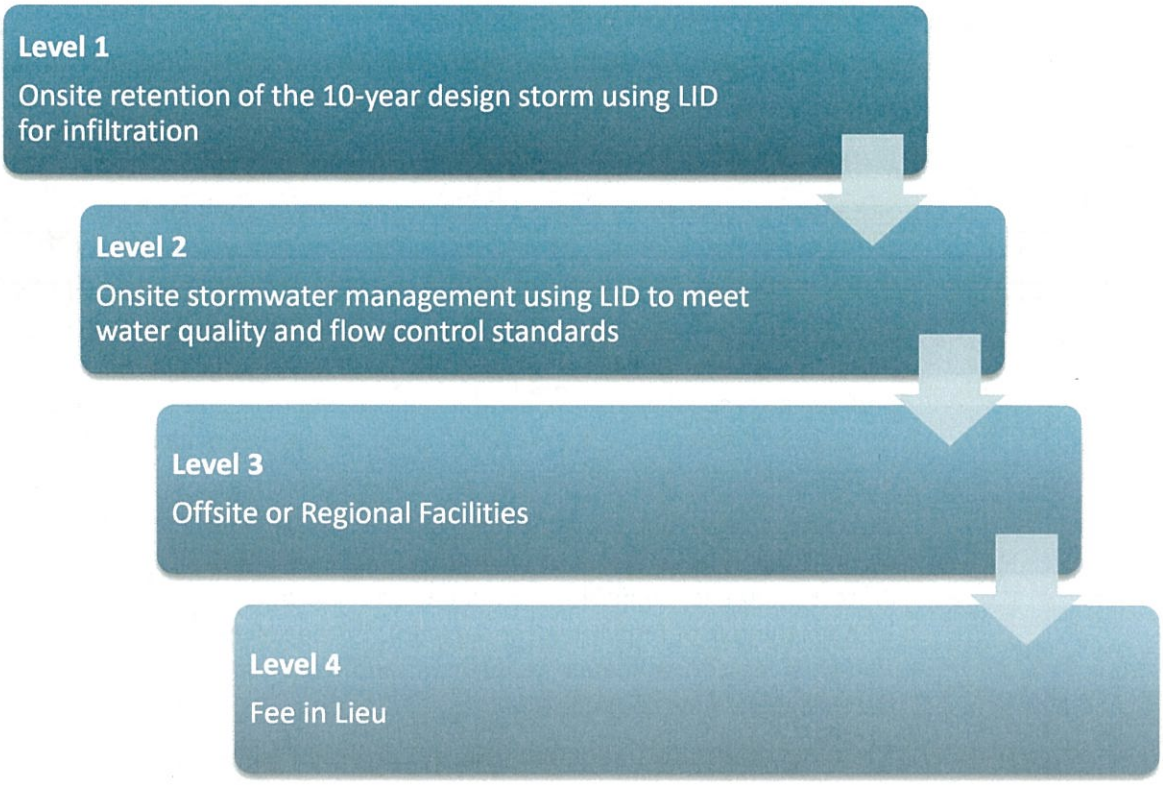

Figure 2-2. Stormwater Management Strategy Heirarchy

After selecting a stormwater management strategy, applicants should indicate which stormwater management facilities are proposed for the site based on the results of the site assessment and preliminary design process. The BMP Sizing Tool should be used to determine preliminary sizes for stormwater management facilities and the BMP Sizing Tool report should be included as part of the application. All proposed stormwater management facilities should be shown on the Preliminary Site Plan.

2.2.4.1 Level 1 – Onsite retention of the 10-year design storm

Given suitable site and soil conditions, the City requires that the stormwater management strategy prioritize infiltration of stormwater runoff to recharge groundwater and mimic pre-development hydrologic conditions. For sites with factored infiltration rates greater than or equal to 2.0 inches per hour, the applicant may provide a stormwater management strategy that will be used to infiltrate to the MEP to meet the water quality and flow control standards in **Chapter 4**.

- Utilization of infiltration stormwater facilities which can infiltrate the full 10-year design storm will be considered the MEP to satisfy both water quality and flow control requirements of **Chapter 4**. Approved LID stormwater management facilities are defined in **Chapter 4**.

When limiting conditions that restrict the use of surface infiltration, the stormwater management strategy may use Level 2 to meet the water quality and flow control standards in **Chapter 4**. Facilities must be sized according to the design requirements in **Chapter 4.**

Limiting conditions may include the following:

A. The site has low infiltration rates of less than 2.0 inches per hour as proven by infiltration testing and/or analysis.

B. Stormwater management facilities would be located on fill.

C. Site areas include steep slopes (>25 percent) and/or geologic hazard zone designations (per OCMC 17.44). A geotechnical engineering or geologist report and City approval is required for infiltration facilities on moderate slopes of 10 to 25 percent.

D. Sites in areas of seasonal high groundwater table. For site preliminary design submittal, sites with jurisdictional wetlands or FEMA floodplains may be required to perform a seasonal high groundwater table assessment and determine that the seasonal groundwater table is at least 12 inches below the proposed bottom elevation of stormwater filtration facilities.

E. Sites with contaminated soils. Sites that have contaminated soils must be evaluated by the Oregon Department of Environmental Quality and/or the U.S. Environmental Protection Agency to determine if areas on the property are suitable for infiltration without the risk of mobilizing contaminants in the soil or groundwater. Documentation showing contamination assessment and determination must be submitted to the City at the time of application.

F. There is a conflict with required source controls for high-risk sites.

The financial viability of constructing onsite infiltration facilities is not sufficient justification to move to a stormwater management strategy lower on the hierarchy. The applicant must demonstrate that the proposed development site has one or more of the physical limitations listed in this section. A geotechnical report or other technical report provided by a licensed professional may be required to document limiting conditions.

2.2.4.2 Level 2 – Onsite stormwater management using LID

When limiting conditions restrict the use of surface infiltration (Level 1), the stormwater management strategy may use onsite LID stormwater management facilities to meet the water quality and flow control standards in **Chapter 4**. Facilities must be sized according to the design requirements in **Chapter 4.** For sites with design infiltration rates between 0.5 and 2.0 inches per hour, the LID facility shall be designed with infiltration as the primary means of flow control. For sites with design infiltration rates less than 0.5 inches per hour, the LID facility will require an underdrain connected to a flow control structure.

Low-impact development (LID) facilities such as planters, swales, rain gardens, ponds or other vegetated facilities are best management practices (BMPs) and are the preferred strategy to meet the stormwater management requirements for water quality treatment and flow control. A list of accepted LID facilities is provided in **Section 4.1**.

For privately-owned stormwater facilities, applicants may propose stormwater management facilities not listed in **Section 4.1.** See **Section 4.1.1** for additional information on alternate facility proposals. Such a proposal will require the applicant to submit a request for a modification to these standards per **Section 1.6**.

2.2.4.3 Level 3 – Offsite or Regional Facilities

When limiting conditions restrict the use of onsite stormwater management facilities, the applicant may construct an offsite stormwater management facility or utilize offsite regional facilities to provide water quality treatment and flow control. When an offsite facility is proposed, design and construction of the facility shall meet these standards. The applicant shall obtain all permits and agreements with facility property owners to utilize an existing facility prior to project approval. Fees may be charged for the use of existing or future City-owned regional facilities. In such case, the fees shall be proportional to the City's cost to acquire property, design, construct, and maintain the regional facility.

2.2.4.4 Level 4 – Fee in Lieu

When a proposed development is unable to meet the flow control or water quality requirements of these standards through the above strategies, the City may allow applicants to pay a fee in lieu of stormwater management improvements. In such a case, the fee shall be based on the proportional cost for the City to construct an equivalent stormwater management facility, including costs for land acquisition, design, construction, maintenance, and administration. Such facilities shall be sized utilizing the BMP Sizing Tool.

The financial viability of designing and constructing onsite or offsite stormwater management facilities is not sufficient justification to utilize the fee in lieu program. Applicants must demonstrate that the proposed development site has one or more of the physical limitations listed in this **Section 2.2.4.1** and that offsite or regional facilities are not a feasible alternative.

2.2.5 Other Project Requirements

Use the Site Assessment and Preliminary Design Checklist **(Appendix B)** to document the following:

A. Grading permit requirements per OCMC 15.48 and associated grading plans required (see **Chapter 3**).

B. Source control requirements for proposed developments that are categorized as high risk for increased pollutant loading (see **Chapter 6**).

C. Erosion and sediment control requirements for sites that result in 1,000 square feet or more of new or replaced impervious area or sites that disturb more than 1 acre (see **Chapter 7**).

D. Other natural resources-related permits that may be required as part of the proposed development activity. It is the responsibility of the applicant to identify and obtain required permits prior to project approval.

Stormwater and Grading Design Standards

CHAPTER 3

Grading, Fill, and Excavation

CHAPTER 3. GRADING, FILL, AND EXCAVATION

The following grading, fill, and excavation standards are intended as MINIMUM requirements for grading activities in Oregon City. If circumstances create a hazard to life, endanger or adversely affect the use or stability of a public way, adjacent property, critical area, or drainage course, the City of Oregon City (City) may impose additional or more stringent requirements.

3.1 Geotechnical Engineering Report

A Geotechnical Engineering Report, when required, shall include, at a minimum, the following:

A. Data regarding the nature, distribution, and strength of existing soils.

B. Conclusions and recommendations for grading procedures and/or erosion control measures.

C. Design criteria for corrective measures when necessary.

D. Opinions and recommendations covering a site's adequacy for further development, such as cut and fill slopes, existing slope, soil types, settlement, expansive soils, applicable and seismic conditions.

E. Allowable bearing pressure, if applicable. Recommendations in the report shall be incorporated in the proposed plans or specifications.

F. A statement as to whether the proposed work involves soils which may be excessively erodible or which may have limited compaction capability, due to the moisture content or the potential unsuitable nature of the material itself.

3.2 Unstable or Steep Slopes

Any grading activity within the Geologic Hazards Overlay Zone shall comply with the City's engineering policies and OCMC 17.44.

3.3 Natural Resources Overlay District

Any grading activity within the Natural Resources Overlay District (NROD) shall comply with the OCMC 17.49.

3.4 Excavations

Unless otherwise recommended in an approved geotechnical engineering investigation report, all excavated slope faces shall be no steeper than is safe for the intended use and shall not be steeper than two-horizontal to one-vertical (2h:1v). Steeper slopes shall be allowed if supported by geotechnical analysis by a Professional Engineer and approved by the City.

3.5 Fill and Embankments

Unless otherwise recommended in an approved Geotechnical Engineering Report, all fills and embankments must comply with the following minimum requirements listed in the section.

3.5.1 Preparation of Ground

A. Fill slopes shall not be constructed on natural slopes steeper than two-horizontal to one-vertical (2h:1v). The ground surface shall be prepared to receive fill by removing vegetation, non-complying fill, topsoil, and other unsuitable materials. The ground surface shall be scarified to provide a bond with the new fill.

B. The ground surface also shall be benched where natural slopes are steeper than four-horizontal to one-vertical (4h:1v) and the height is greater than 5 feet. This benching shall be into sound bedrock, glacial till, or other competent material as determined by a Geotechnical Engineer. The bench under the toe of fill on a slope steeper than 4h:1v shall be at least 10 feet wide. The area beyond the toe of fill shall be sloped for sheet overflow or a paved drain shall be provided. Refer to the Oregon Department of Transportation Standard Embankment Construction Detail (DET2100) for guidance.

C. When fill steeper than 4h:1v and higher than 5 feet is to be placed over an excavation, the Geotechnical Engineer shall certify that the foundation is suitable for the fill.

3.5.2 Fill Material

Organic material shall not be permitted in fills. No rock or similar irreducible material with a maximum dimension greater than 6 inches shall be buried or placed in fills.

EXCEPTION: The City Engineer may permit placement of larger rock or similar irreducible material (i.e., concrete, etc.) when a Geotechnical Engineer properly devises a method of placement and continuously inspects its placement and approves the fill stability. The following conditions shall also apply:

A. Before issuance of a Fill Permit, potential areas for rock disposal shall be delineated on the grading plan.

B. Rock sizes greater than 6 inches in maximum dimension shall be 5 feet or more below grade, measured vertically.

C. Rocks shall be placed to ensure filling of all voids with well-graded soil.

3.5.3 Compaction

All fills and embankments shall be compacted and tested in accordance with **City standards and the Oregon Structural Specialty Code (OSC), unless otherwise recommended in an approved Geotechnical Engineering Report**. Fills on sites of proposed structures shall be compacted as directed by the City Building Official in accordance with the OSC, **unless otherwise recommended in an approved Geotechnical Engineering Report**.

Testing of compaction shall be at the applicant's expense and shall be conducted by an independent and approved soil testing laboratory. Test frequency shall be per the City's standards, Project Engineer's direction, and/or at a frequency recommended in the Ge-

otechnical Engineering Report. At a minimum, testing shall start at the commencement of fill activities and one test shall be taken for every 500 cubic yards placed. In addition, where the City Engineer requires testing of the compaction of soils outside public right-of-way, compaction shall be tested by an independent soil testing laboratory at the owner's expense.

Minimum compaction values shall comply with City standards and OSC, unless otherwise recommended in an approved Geotechnical Engineering Report. Where a site-specific Geotechnical Engineering Report is approved, the recommendations in the report and values found shall supersede the City's standards as applicable.

Compaction of native soils is prohibited in areas proposed for stormwater management facilities and porous pavements, as compaction can significantly reduce the infiltration capacity of the soil. Refer to the site-specific engineering specifications for additional information.

3.5.4 Structures

Fills that are intended to support structures shall be constructed in conformance with the requirements of the latest edition of the OSC, as adopted by the City. An assignment of allowable soil-bearing pressures will be under the jurisdiction of the City Building Official in accordance with the OSC. If a fill is proposed over an area that the City deems to be a potential building site and the applicant does not state an intent to construct buildings on the fill area at that time, then the City may, at its own discretion, require that a notice be recorded as a public record containing provisions which will include the nature and extent of the grading which has occurred on the parcel.

3.5.5 Stormwater Management Facility Berm Embankments

The following guidelines below shall be considered (or addressed as applicable) in the Geotechnical Engineering Report:

A. Berm embankments shall be constructed on suitable native consolidated soil (or adequately compacted and stable fill soils) which is free of loose surface soil materials, roots, and other organic debris. The embankment soils shall have the following minimum/maximum soil characteristics per the U.S. Department of Agriculture's Textural Triangle: a minimum of 30 percent clay, a maximum of 60 percent sand, a maximum of 60 percent silt, with nominal gravel and cobble content.

B. The berm embankment shall be constructed of compacted soil, (95 percent maximum dry density, per American Society of Testing and Materials (ASTM) D1557) placed in 6- to 8-inch lifts with hand-held equipment and 10- to 12-inch lifts with heavy equipment.

C. Berm embankments shall be constructed by excavating a key equal to 50 percent of the berm embankment's cross-sectional height and width measured through the center of the berm, except in bedrock where the key minimum depth can be reduced to 1 foot of excavation into the till.

D. Anti-seepage collars (and/or pipe anchor wall per City Standards) shall be placed on outflow pipes in berm embankments that impound water greater than 6 feet in depth.

E. Berm embankments 6 feet or less in height, including freeboard and as measured through the center of the berm, shall have a minimum top width of 5 feet. Berm embankments greater than 6 feet in height, as measured through the center of the berm shall be designed by the Geotechnical Engineer.

F. Where maintenance access is provided along the top of berm, the minimum width of the top of berm shall be 12 feet.

3.6 Setbacks

Cut and fill slopes shall be set back from site boundaries in accordance with this section and the **Oregon Structural Specialty Code (OSC)**. Setback dimensions shall be horizontal distances measured perpendicular to the site boundary.

3.6.1 Top of Cut Slopes

The top of cut slopes shall not be made nearer to a site boundary line than one-fifth of the vertical height of cut with a minimum of 2 feet, and a maximum of 10 feet. The setback may need to be increased for any required interceptor drains.

3.6.2 Toe of Fill Slopes

The toe of fill slopes shall not be nearer to the site boundary line than one-half the height of the slope with a minimum distance of 3 feet and a maximum of 20 feet. Where a fill slope is to be located near the site boundary and the adjacent offsite property is developed, special precautions shall be incorporated in the work as the City Engineer deems necessary to protect the adjoining property from damage as a result of such grading. These precautions may include, but are not limited to, the following:

A. Additional setbacks

B. Provision for retaining walls

C. Mechanical or chemical treatment of the fill slope surface to minimize erosion

D. Provisions for the control of surface waters

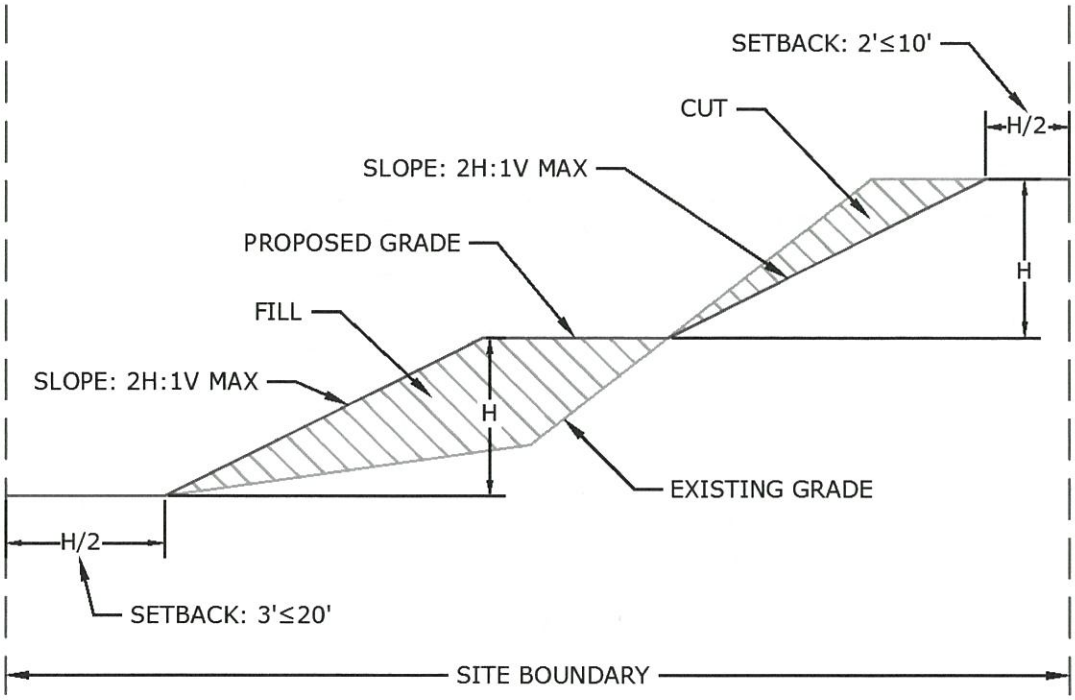

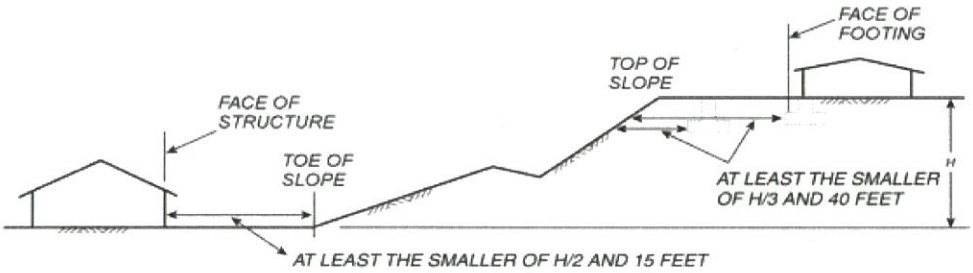

For SI: 1 foot = 304.8 mm.

FIGURE 1808.7.1
FOUNDATION CLEARANCES FROM SLOPES

Figure 3-6. Grading Setbacks

CHAPTER 4

Stormwater Management Facility Selection and Design

CHAPTER 4. STORMWATER MANAGEMENT FACILITY SELECTION AND DESIGN

This section of the Stormwater and Grading Design Standards describes the methods and criteria for selecting and designing stormwater management facilities for projects that exceed the development thresholds described in **Chapter 1**. Additional structural source controls may be required for certain types of development categorized as high risk for pollutants as described in **Chapter 6**.

4.1 Stormwater Management Facility Selection

Impervious area reduction techniques, such as retaining vegetation and open space, clustering buildings, and constructing porous pavement and green roofs, may be used as techniques to help mitigate stormwater runoff and reduce the size of the required stormwater management facilities. Impervious area reduction techniques should be identified during the site planning process (See **Chapter 2**).

Low-impact development (LID) facilities such as planters, swales, rain gardens, ponds, and other vegetated facilities are best management practices (BMPs) and are the preferred strategy to meet the stormwater management requirements for water quality treatment and flow control. The following types of stormwater management facilities can be used to meet these standards.

- Stormwater planters (infiltration and filtration)
- Rain gardens (infiltration and filtration)
- Vegetated swales (infiltration and filtration)
- Detention ponds (infiltration and filtration)

Applicants shall follow the Stormwater Management Strategy in **Section 2.2.4** in selecting the appropriate approach to manage stormwater runoff. **Table 4-1** provides a quick reference to match stormwater management facility types with common design objectives and site constraints.

Table 4-1 Stormwater Facility Selection Guide

Facility can be used for	Porous pavement & Pervious Pavers	Green roof	Stormwater planter	Rain garden	Vegetated swale	Detention pond	Manufactured treatment technologies *
Impervious area reduction	●	●					
Infiltration facility[a]			●	●	●	●	
Flow control	●	●	●	●	●	●	
Water quality treatment	●	●	●	●	●	●	●
Private property	●	●	●	●	●	●	●
Public property or right-of-way		●	●	●	●	●	
Steep slopes		●	w/liner	w/liner			●

[a] Facilities that include impermeable liners do not satisfy the requirements for surface infiltration.
**Applicable only for constrained sites where full implementation of LID facilities may not be possible.*

4.1.1 Alternate Facilities

For privately-owned stormwater facilities, applicants may propose stormwater management facilities that are not listed in **Table 4-1**. Such a proposal must be submitted as a request for a modification to the stormwater standards per **Section 1.6**.

Alternate facilities must be sized using the Engineered Method as described in **Section 4.3.4**. Examples of alternate facilities include filter strips for water quality treatment, underground detention storage, dry wells, or other underground injection control (UIC) facilities on private property.

If a proposed facility meets the Oregon Department of Environmental Quality (ODEQ) criteria for a UIC, the applicant shall prepare appropriate registration information for ODEQ and submit a modification request to the City.

4.2 Design Criteria for Stormwater Management Facilities

Stormwater management facility design is based on meeting the City's design criteria to address LID requirements, water quality treatment standards, and flow control requirements.

A. LID Requirement: The goal is to prioritize the use of LID stormwater facilities to the maximum extent practicable (MEP) to mimic the natural stormwater runoff conditions of the pre-developed site and recharge the groundwater. As described in **Chapter 2**, the following strategies meet LID requirements:

- **Onsite retention of the 10-year design storm** – Retain and fully infiltrate the 10-year design storm (See **Table 5-2** 24-hour Rainfall Depths in Oregon City) onsite using surface infiltration facilities for sites with factored infiltration rates greater than or equal to 2.0 inches per hour. This is equivalent to retaining and infiltrating runoff from new and replaced impervious surfaces for the 3.5-inch storm over 24 hours. The facility must fully infiltrate within 72 hours following the beginning of the storm event. For sites with design infiltration rates between 0.5 and 2.0 inches per hour, the LID facility shall be designed with infiltration as the primary means of flow control. For sites with design infiltration rates less than 0.5 inches per hour, the LID facility will require an underdrain connected to an outlet with a flow control structure. Infiltration of the full 10-year design storm is assumed to satisfy both water quality and flow control requirements listed in paragraphs B and C of this section.
- **Onsite stormwater management using LID** – Utilize vegetated stormwater facilities to address the water quality and flow control requirements of the site. Facilities must be sized according to the design requirements of this chapter, utilizing either the BMP Sizing Tool, explained in **Section 4.3.1**, or the Engineered Method.

B. **Water Quality Requirement:** Water quality facilities shall be designed to capture and treat 80 percent of the average annual runoff volume to the MEP with the goal of 70 percent total suspended solids removal. The treatment volume equates to a **water quality design storm of 1.0 inch over 24 hours**[1]. The BMP Sizing Tool addresses these water quality requirements to size stormwater management facilities.

   Hydrodynamic separators, when used as a sole method of stormwater treatment, do not meet the MEP requirement for water quality treatment with regard to these stormwater standards.

C. **Flow Control Requirement:** Flow control facilities shall be designed so that the **duration of peak flow rates from post-development conditions shall be less than or equal to the duration of peak flow rates from pre-development conditions for all peak flows between 42 percent of the 2-year peak flow rate up to the 10-year peak flow rate** [2]. A hydrologic/hydraulic analytical model capable of performing a continuous simulation of peak flow rates from local long-term rainfall data must be used to determine the peak flow rates, recurrence intervals, and durations. The BMP Sizing Tool addresses these flow control requirements to size stormwater management facilities.

   For sites with conditions that limit the use of infiltration (fill, steep slopes, high groundwater table, wellhead protection areas, and/or contaminated soils), the applicant must submit documentation of limiting conditions. See **Section 2.2.4.1** for additional information regarding limiting conditions. In some cases, utilizing LID facilities may not be feasible and the City may approve the use of alternative stormwater management facilities to meet the water quality and flow control requirements. See **Section 4.1.1** for additional information regarding alternative facilities.

D. **General Conveyance:** Development shall not cause or increase flooding of adjacent or downstream property. An upstream and downstream analysis of the drainage system shall be conducted according to the guidelines in **Chapter 5**. Open channel and closed conduit systems shall be designed to convey the design storms listed in **Table 5-1**.

4.3 Design Methods

This section explains the two methods accepted by the City for designing stormwater management facilities, the BMP Sizing Tool Method and the Engineered Method. To use a different method for sizing a treatment facility type not covered in these standards, applicants must obtain City approval prior to submitting permit applications for review.

---

[1] The water quality design storm rainfall depth as documented in a technical memorandum: *Selection of Representative Rainfall Volume and Rainfall Intensities to result in Capture and Treatment of 80% of the Average Annual Runoff Volume*, Brown and Caldwell, May 11, 2010.

[2] The lower threshold of 42 percent of the 2-year peak flow rate for flow-duration matching is based on a 2008 study by the Oregon Department of Transportation (ODOT) titled, "Water Quantity (Flow Control) Design Storm Performance Standard." ODOT's study found that bed movement in sand-bedded streams occurs at approximately two-thirds of the bank full flow, which is assumed to be roughly equivalent to the 1.2 year discharge. ODOT's flow frequency analysis established that two thirds of the 1.2-year discharge is approximately equivalent to 42 percent of the 2-year discharge.

The Engineered Method must utilize the continuous runoff model or equivalent if approved by the City Engineer as discussed in section 4.3.4.

Submittal requirements are included in **Chapter 9**.

4.3.1 BMP Sizing Tool Method

A BMP Sizing Tool is available from the City's website to assist with the sizing of stormwater management facilities that meet the requirements of these standards. The following facilities can be sized using the tool:

A. Rain garden – infiltration and filtration

B. Stormwater planter – infiltration and filtration

C. Vegetated swale – infiltration and filtration

D. Detention pond – infiltration and filtration

The detention pond option will allow credit for the utilization of upstream LID facilities, including rain gardens, planters, infiltrators, and swales.

The volume for a manufactured underground stormwater management system shall be modeled as a detention pond in the BMP sizing tool.

The report generated by the BMP Sizing Tool should be included with permit application submittals. The BMP Sizing Tool can be used during the initial site planning and during final design. The soil infiltration rates used during final design must meet the criteria outlined in these standards.

4.3.2 Pre-developed Hydrology

For the purposes of hydrologic modeling, the pre-developed conditions of the site will be modeled as the historical vegetation which existed at the site prior to urban settlement. Most areas of the City will be modeled as forest under pre-developed conditions. The applicant may use historic photos, reports, or other available sources to document an alternative condition of the site prior to urban settlement.

In the absence of site-specific resources, the City has developed a map of historic vegetation conditions that can be used in determining the appropriate pre-developed conditions land cover (See **Appendix G**). This map is also available for viewing within the City's GIS Public Portal.

4.3.3 Facility Design Adjustments

The BMP Sizing Tool was developed based on specific design requirements for each facility type. Facilities sized using the tool must follow the design details for ponding depth, overflow height, depth of growing media, depth of drain rock, and sizing of orifice controls (where relevant). Applicants who wish to propose alternate facility specifications may use **Table 4-2** to adjust the size of the stormwater facility calculated from the BMP Sizing Tool.

Applicants considering design adjustments different from those included in **Table 4-2** should utilize the Engineered Method to show how the proposed facility size and design specifications will meet the flow control and water quality requirements of these standards.

Table 4-2. Facility Sizing Adjustments*

Facility types	Design modification	Facility size adjustment
Stormwater planter Rain garden Vegetated swale	Increase growing media depth by 12 inches or more	Reduce required facility surface area by 20 percent

**Additional facility size adjustments may be developed at the discretion of the City Engineer.*

If using a Facility Sizing Adjustment, it must be clearly stated in the report and described and shown on the engineering plans.

4.3.4 Engineered Method

As an alternative to the BMP Sizing Tool, the Engineered Method may be used to calculate the required size of stormwater management facilities for any size or type of development. The Engineered Method provides the developer with flexibility to factor in a wider variety of site data and facility design parameters to determine the size and configuration of stormwater management facilities.

The Engineered Method may be used to do the following:

A. Address unique site conditions
B. Apply a new or emerging design technology
C. Propose alternate facility design specifications

Use of the Engineered Method for flow control requires the use of a continuous simulation hydrologic model that runs a long-term record of historical hourly rainfall data. The model must show that the facility was sized to manage the post-development flows so that outflow from a facility matched the pre-development flow duration curve for the range of flows considered to have the greatest erosive impact on open-channel systems (42 percent of the 2-year peak flow to the 10-year peak flow). The City must pre-approve the hydrologic/hydraulic analytical model prior to submittal or development of any plans and/or calculations. Regardless of how the stormwater calculations are performed, the report submitted to the City must show how the proposed stormwater management facilities meet the design criteria for LID, water quality, and flow control provided in **Section 4.2.**

Creation of a continuous simulation hydrologic model for a specific development site requires specialized expertise and usually takes additional time and expense to develop and review. The applicant will be required to pay additional fees to the City to review stormwater management plans developed using the Engineered Method. These fees will be used to pay for a third-party peer review of the hydrologic model, stormwater management plan, facilities, details, supporting documentation, and submittals.

The Engineered Method can also be used to document the use of the hydrograph method to size water quality and infiltration facilities when flow control is not required. See **Appendix H** for additional hydrograph method guidance.

4.4 Unmitigated Areas

Due to topographic constraints, runoff from portions of a development site may be permitted to be released at post-development rates (without flow control), provided that all of the following are met:

A. Runoff from the unmitigated area rejoins the pre-development downstream drainage course within one quarter mile downstream of the stormwater management facility.

B. The project engineer has demonstrated in the downstream analysis (see **Section 5.2.4**) and in conveyance capacity calculations (see **Chapter 5**) that the downstream drainage course will not be adversely impacted by the runoff from the unmitigated area. Improvements to the downstream conveyance system may be required to provide adequate conveyance capacity for flows from unmitigated areas.

C. Public easements (as required) are obtained by the applicant from all downstream property owners, through whose property the unmitigated runoff flows, prior to rejoining the detained runoff from the site.

D. The cumulative release rate from all areas of the project site, including the unmitigated area, shall not exceed the cumulative pre-developed rates from the site (in accordance with the flow control requirements in **Section 4.2**). This may be achieved by providing additional storage and flow control in the stormwater management facility to compensate for unmitigated areas.

4.5 Infiltration Rate and Testing

To size stormwater management facilities, it is necessary to know the infiltration rate of the soil at the actual facility location. Infiltration testing is not required on development projects which create less than 5,000 square feet of new or replaced impervious surface or when the applicant can justify the lack of a test needed due to historical data assuming no infiltration credit is being requested. When testing is not completed, the facility will be sized using the minimum infiltration rate as shown in the Natural Resources Conservation Service's soil classification. The infiltration rate chosen within the BMP sizing tool, shall match the minimum infiltration rate as shown in the Natural Resources Conservation Service's. The City has approved two methods for performing an infiltration test, Basic Test and Professional Test. Specifications for both test procedures are included in **Appendix D**.

4.6 UIC Registration

Subsurface discharging infiltration facilities that are defined by ODEQ as UICs (e.g., infiltration trenches or dry wells) require an approved modification request (see **Section 1.6**). Any UIC for private property shall be designed with an approved pretreatment device and registered with ODEQ as required. The City will not allow new UIC devices which accept stormwater runoff from a public right-of-way or for public ownership or maintenance.

4.7 Detention Pond Design Requirements

The City encourages the use of detention ponds that serve more than one development. A facility that serves more than one development will be referred to as a sub-regional facility. Sub-regional facilities can be more effective in maximizing the development area, reducing the overall maintenance requirement, and minimizing the overall construction cost.

The City also encourages applicants to design detention ponds to function as multipurpose facilities (i.e. parks, open space, or recreation facilities), provided that any alternative uses are compatible with the primary stormwater functions and maintenance standards.

The following design requirements apply to all detention pond designs:

4.7.1 Geotechnical Report

Detention ponds shall have a geotechnical report that discusses the site's suitability for the type of stormwater pond being proposed and/or the engineer's recommendations as to how the site shall be improved to make the site suitable for the type of stormwater pond being proposed.

4.7.2 Pond Depth

The maximum active storage depth is 4 feet. An exception from this criterion may be approved on a case-by-case basis if additional safety factors can be shown to address this issue.

When using the BMP Sizing Tool, the total depth measurement reported in the tool includes the active storage depth as well as the depth of growing media, separation layer, and drain rock, as shown in **Figure C-11** in **Appendix C**.

4.7.3 Bottom Width

For ponds with an active storage depth of 3 feet or less, the minimum bottom width shall be 10 feet. For ponds with an active storage depth of over 3 feet, the minimum bottom width shall be 15 feet. An exception from this criterion may be approved on a case-by-case basis if required by topographical or physical boundary constraints. For the purposes of this bottom width measurement, the width shall be measured at the interior toe of slope.

4.7.4 Interior Side Slopes

Interior side slopes shall be no steeper than three horizontal to one vertical (3h:1v). An exception from this criterion may be approved on a case-by-case basis if required by topographical or physical boundary constraints.

4.7.5 Exterior Side Slopes

Exterior side slopes that have vegetated surfaces that require mowing shall be no steeper than four horizontal to one vertical (4h:1v). Exterior side slopes that have vegetated surfaces that do not require mowing shall be no steeper than two horizontal to one vertical (2h:1v). Exterior slopes shall be landscaped so that there is no exposed soil.

Berm embankments shall meet requirements of **Section 3.5.6.**

4.7.6 Conveyance Outfalls

Pipe outfalls from the conveyance system into the pond shall be flush with interior side slopes. Conveyance outfalls shall be designed with energy dissipation, in accordance with **Section 5.8**.

4.7.7 Outlet Structures

A. **Primary Outlet:** Detention ponds shall have a perforated pipe underdrain system to convey water from the pond to the flow control structure. See **Figure C-11** in **Appendix C** for a graphical depiction showing the underdrain system as the primary outlet.

B. **Secondary Outlet:** Detention ponds shall have a secondary pond outlet structure, such as a catch basin with grated lid located along an interior side slope. This secondary pond outlet will serve as a backup to convey stormwater to the flow control manhole should the primary pond outlet become clogged. The lip elevation of the secondary pond outlet should be set at approximately the ten-year design water surface. See **Figures C-11** and **C-12** in **Appendix C** for a graphical depiction showing a secondary pond outlet.

C. **Flow Control Structure.** Detention ponds shall have a flow control structure with orifice and weir dimensions sized using the BMP Sizing Tool or the Engineered Method. See **Figure C-12** in **Appendix C** for a graphical depiction showing a typical flow control structure. The flow control structure shall be designed to meet the following criteria:

1. Detention pond control structures may be either weir or orifice structures located in an enclosed manhole and meet City's standards. Locate the outlet control structure(s) outside the open water storage area.
2. The control structure shall be designed with an internal overflow device, such as an open top riser, to pass the 25-year design storm event (or 100-year design storm for a sub-regional facility) without allowing runoff to discharge through the emergency spillway and without causing upstream or downstream flooding. The design of the internal overflow shall assume that flow control orifices are plugged during the peak design storm.
3. Flow control manholes shall have solid locking covers. Open grates shall not be permitted in flow control manholes.
4. Locate the flow control structure to allow maintenance access as described in **Section 4.9.1**. The outlet flow control structure shall require little to no attention for normal operation.
5. The construction drawings shall include a separate design detail for each flow control structure.

4.7.8 Emergency Overflow

All ponds shall have an emergency overflow system that will safely pass runoff from a post-developed 100-year design storm through or around the detention pond and direct flows to the downstream conveyance system. The design intent of the emergency overflow system is to protect the integrity of the pond, as well as associated embankments

and downstream properties, during large (rare) storm events and/or failure of the flow control structure. Secondary spillway shall meet the following criteria:

A. Locate the spillway to direct overflows safely toward the downstream conveyance system.

B. Locate the spillway in existing soil wherever possible. Protect the spillway with riprap or an approved material that extends to, and is an appropriate distance beyond, the bottom of the berm embankment. Fill the voids of the riprap with soil and vegetate the spillway with grass or ground cover. The selection of the vegetation on the spillway shall consider the required design capacity.

C. The invert elevation of the spillway shall be a minimum of 6 inches above the primary overflow elevation.

D. The minimum spillway depth shall be nine inches from the top of the berm. The free board during the design storm event shall be a minimum of 6 inches.

E. Alternate methods to accomplish the design intent of the secondary overflow system will be acceptable as long as they accomplish the same level of protection and are approved by the City Engineer.

4.7.9 Swales

All vegetated swales shall use rip rap or other methods to minimize and reduce erosion within the swale.

4.7.10 Inspection and Maintenance Access

All manufactured systems shall include inspection and maintenance access.

4.7.11 Signage

All ponds shall have signs placed so that at least one is clearly visible and legible from all adjacent streets, sidewalks, or paths. Applicants may add an indigenous, native wild bird(s) or wild animal(s) logo or cartoon figure on the sign. Sign spacing shall be approved by the City Engineer. The sign shall read:

D. Please Do Not Disturb the Vegetation or Wildlife

E. Oregon City Stormwater Management Facility

F. For More Information, Call Oregon City Public Works at 503-657-8241

The minimum sign size shall be 12-inches x 18-inches. The maximum sign size shall be 24-inches by 30-inches. The material shall be aluminum with green reflective sheeting and silk screen lettering or equal as approved by the City Engineer. The signs shall be installed on an 8-foot long by 6-inch by 4-inch treated lumber post which is set in concrete and buried 30 inches into the ground. The developer shall install these signs before the City's final acceptance of the pond.

4.7.12 Site Constraints

All publicly-owned detention ponds shall be located in a separate tract dedicated to Oregon City for stormwater facilities. Open ponds shall not be located in dedicated public road right-of-way areas.

4.8 Planting, Irrigation, and Fencing Requirements

Landscaping guidelines for stormwater management facilities are included in the following sections and as described in 9.3.12.

4.8.1 Soil Mixes for Stormwater Management Facilities

Vegetated facilities require a soil/landscape system that simultaneously supports plant growth, soil microbes, water infiltration, nutrient and pollutant adsorption, sediment and pollutant filtration, and pollutant decomposition. Therefore, the soil mix selected for a facility is critical to its success. See the specific facility design criteria in **Appendix C**, and also refer to **Appendix A** for growing media specifications for vegetated facilities.

4.8.2 Planting

Stormwater management facilities with vegetative plantings must meet the following requirements:

A. Establishment procedures, such as control of invasive weeds, animal and vandal damage, mulching, re-staking, watering, and mesh or tube protection replacement, shall be implemented to the extent needed (as determined by the City) to ensure plant survival.

B. Stormwater facilities located in the public street right-of-way are not permitted to use evergreen trees to meet planting requirements.

C. Selected plant materials should be appropriate for soil, hydrologic, and other facility and site conditions (See **Appendix A**).

D. All plants within stormwater management facility areas shall be appropriate native species from the **Appendix A** Plant List (no nuisance, invasive, or prohibited plants).

E. The design for plantings shall minimize the need for herbicides, fertilizers, pesticides, or soil amendments at any time before, during, and after construction and on a long-term basis.

F. Plants shall be selected and planted to minimize the need for mowing, pruning, and irrigation.

G. Certified weed-free native grass or native wildflower seed shall be applied at the rates specified by the suppliers. If plant establishment cannot be achieved with seeding by the time of substantial completion of the stormwater facility portion of the project, the contractor shall plant the area with approved sod, plugs, container plants, or other means to complete the specified plantings and protect against erosion before water is allowed to enter the facility.

H. When any plantings are located within five (5) feet of a perforated pipe, the pipe shall be wrapped in filter fabric. Plantings should be offset from all utilities by a minimum of five (5) feet when possible.

4.8.3 Irrigation

The applicant may choose how to irrigate such as by truck or irrigation system. However, the City recommends onsite irrigation, with appropriate backflow prevention and winterization measures as necessary, to maintain the plant survivability.

When using temporary irrigation onsite using City water, the applicant must obtain a hydrant meter and backflow preventer from Public Works. Once the meter and backflow preventer are returned, the applicant is required to pay the fee for water usage.

Nearby water from a private water line is not allowed for irrigation.

When using temporary irrigation onsite using City water, the applicant shall discuss the irrigation system with the City prior to the completion of the two-year maintenance period. The City may request the irrigation be removed or request the irrigation remain in place for use by the City. In either case, the hydrant meter and backflow preventer will need to be returned and the water fee paid.

Permanent irrigation is desired when the City takes over the maintenance of the stormwater management tracts. Permanent irrigation plans must be submitted to Public Works and approved by Public Works prior to installation.

When using permanent irrigation onsite, the applicant must install a backflow preventer and obtain a meter from Public Works. The applicant is required to pay the fee for water usage during the two-year maintenance period.

All irrigation systems require payment of a water meter installation fee.

Installation of permanent irrigation is considered an additional tap to the water main system and requires a System Development Charge.

4.8.4 Fencing and Handrails

Fences are required for all stormwater facilities with grades steeper than 3 feet horizontal to 1 foot vertical (3h: 1v) or adjacent any walls/bulkheads greater than 24 inches in height. Where fences are required, fence height may range from 4 to 8 feet high depending on the location and security need as determined by the City Engineer. Fencing materials and colors shall be complementary to the site design. Handrails shall be provided on the pedestrian side of stormwater planters or other stormwater management facilities with vertical sides that exceed 24 inches in depth.

Public Facilities: For publicly maintained facilities, the City may require the use of chain link fencing for security and protection. When fencing is required around a pond, a minimum of one locking access gate shall be provided that is 16 feet wide, consisting of two swinging sections each 8 feet in width. At least one pedestrian gate must be provided, with a minimum 4-foot width. Fence material shall be No. 11 gauge galvanized steel fabric with bonded vinyl coating. Vinyl coating shall be a color designed to blend with the surrounding area (likely green, brown, or preferably black). Fence posts shall be galvanized steel, with top caps, and set a minimum of three feet deep in concrete. Crossbars shall connect adjacent fence posts, with diagonal braces at corners and ends. All posts, cross bars and gates shall be painted or coated the same color as the vinyl clad fence. Fence height requirement may range from 4 to 8 feet high depending on the location and security need as determined by the City Engineer.

Private Facilities: Designers are encouraged to **minimize or eliminate the need for fencing** for privately maintained facilities. Fencing for privately owned facilities is at the discretion of the owner and shall be implemented if deemed applicable based on local Building Codes. However, private owners are encouraged to follow the above criteria for public facilities when determining fencing requirements. When any fencing is used, it must be consistent with the City's fencing requirements. In some locations City's Zoning Code may prohibit or restrict the type of fencing or require screening. If fencing is prohibited, the designer may have to change the facility design to eliminate fencing requirements.

4.9 Operation and Maintenance (O&M) Requirements

Operations and Maintenance requirements apply to all stormwater management facilities and related facility components. Owners are required to provide all-weather access for the City to inspect the facilities regularly to determine maintenance needs. See **Chapter 8** for O&M requirements.

4.9.1 General Maintenance Access

Publicly-maintained stormwater facilities must be provided an access road designed and constructed for the intended use and purpose for accessing stormwater facilities. City-maintained facilities should be located on or directly adjacent to the public right-of-way. In locations where access roads are approved by the City, following are the minimum criteria required:

A. A site plan and profile of the access road.

B. Maximum grade: 12 percent.

C. Minimum width of surface: 12 feet.

D. Paved surfaces: 2-inch asphalt concrete (AC) thickness over 6" Aggregate Base OR Grass Pavers.

E. Paved surfaces shall extend to within 10 horizontal feet and 3 vertical feet of openings to all water quality and flow control structures unless otherwise approved by the City.

F. Access roads shall have an approved driveway approach from the public street and meet minimum design standards from Oregon City Municipal Code Title 17, except as modified by this section.

G. Maintenance road access for publicly-maintained facilities shall be shown on the recorded plat map and be situated in a separate tract and identified with the specific and intended use for maintenance access.

4.9.2 Detention Pond Interior Maintenance Access

Detention ponds shall have an access road suitable for maintenance equipment (backhoe, etc.) to safely access the interior bottom of the pond for the purpose of sediment removal. Minimum access road requirements include the following:

A. The interior pond access will begin at the edge of the required pavement and end within 3 vertical feet and 10 horizontal feet of the lowest elevation of the pond.

B. The minimum access road requirement is at least 10 feet wide with slopes no steeper than 15 percent. Curved alignments shall be 15 feet wide to accommodate equipment turning radius.

C. Access roads longer than 300 feet from a public right-of-way shall provide for a truck turn-around area.

D. Bollards shall be installed to limit vehicle access. Bollards shall consist of fixed bollards on each side of the access road and two lockable, removable bollards equally located between the fixed bollards.

E. The pond interior access shall be constructed of a landscape block surface by removing all unsuitable material, laying a geotextile fabric over the native soil, placing landscape blocks, filling the honeycombs with topsoil, and planning appropriate zone grass. Other materials may be reviewed and approved on a case-by-case basis, provided they do not create additional impervious surface and will meet vehicle wheel load requirements.

4.9.3 Private Stormwater Facilities

A. Private stormwater facilities require a recorded maintenance covenant on the property that includes the Operations and Maintenance Plan for the private stormwater feature. See **Appendix C** and **Appendix F**.

B. Manufactured Treatment Technologies and Systems as allowed by **Appendix E** shall be designed with appropriate maintenance access points and systems which could include access roads as described in 4.9.1 and/or multiple access hatches to the systems themselves.

Stormwater and Grading Design Standards

CHAPTER 5

Conveyance System Design

CHAPTER 5. CONVEYANCE SYSTEM DESIGN

Stormwater conveyance system design is an integral component of stormwater management planning. Three considerations largely shape the design of conveyance systems: hazards to life (public safety), hazards to property (flooding), and hazards to habitat (water quality and erosion). Acceptable conveyance system design must maintain compatibility and minimize interference with existing drainage patterns, control onsite and downstream flooding of property, structures and roadways, and minimize the potential degrading environmental impacts of stormwater runoff.

This chapter includes guidelines as well as specific requirements for the design engineer developing the conveyance system for the stormwater management plan. The design requirements cover both open channel and closed conduit stormwater conveyance systems.

5.1 General Conditions

The following are the general conveyance requirements. It is understood that these are general guidelines and that every site will encounter specific issues regarding the overall conveyance system design.

A. The applicant is required to provide an acceptable point of discharge from the developed site. Generally, the point of discharge shall be discussed by the City of Oregon City (City) during pre-application by the City prior to issuing the land use decision.

B. A development that requires connection to the public stormwater system shall provide connection points to allow all adjacent uphill parcels to be served by the stormwater system as the natural drainage patterns and future planning concerns dictate.

C. The City's construction standards and specifications, including acceptable materials, workmanship, fittings, and installation, shall be followed for all aspects of conveyance design.

D. Conveyance systems shall be designed and constructed in compliance with requirements of this chapter. Written authorization of approval from other jurisdictions may be required at the discretion of the City.

E. A stormwater separated conveyance system may be required to accept and convey upstream offsite stormwater runoff through the site. See **Section 5.2.3** for upstream conveyance requirements.

F. Conveyance systems shall be designed and constructed to minimize downstream damage and erosion and to protect existing natural resources to the maximum extent practicable.

G. Conveyance systems shall be designed and constructed in accordance with floodplain management policies and regulations and other National Flood Insurance Program requirements and as determined by the City.

H. The owner is responsible for controlling the flows from springs and groundwater that surface during construction and within the warranty period of the drainage system.

I. Any proposed modification to the approved conveyance system plans shall be submitted to the City for review and approval prior to construction.

5.2 Stormwater Conveyance Requirements

Stormwater conveyance systems are to be designed to intercept and convey stormwater runoff efficiently enough to meet flood protection criteria. The conveyance system should complement the site design and structural stormwater controls to mitigate the major impacts of urban development.

5.2.1 Points of Discharge

The following considerations and/or limitations will be evaluated prior to approving the point of discharge:

A. The applicant will establish one or more acceptable points of discharge. Generally, the points of discharge shall be accepted by the City prior to issuing the land use decision.

B. Runoff from developed portions of the site drainage basin should be discharged at the existing natural drainage outlet or outlets.

C. Runoff shall not be allowed to flow over adjacent public or private property at a rate, volume, or location materially different from that which existed before development occurred.

D. Runoff must be discharged in a manner that will not cause adverse impacts to downstream properties or previously constructed stormwater systems.

E. If the point of discharge is an open channel, then adequate velocity dissipation and/or additional channel protection shall be required to prevent erosion and/or alteration to the existing downstream drainageway.

F. Any connection to a public or private piped downstream stormwater conveyance system shall be approved by the City. The means and methods of connecting or extending a piped conveyance system will be consistent with City standards and/or other standards required by agencies that have the authority to regulate the connection.

G. When private property must be crossed to reach an approved point of discharge, the developer is responsible to acquire a recorded drainage easement from the property owner. The drainage easement must meet City approval.

H. **Approved Discharge Point** – Stormwater from residential impervious surfaces (roofs, driveways, etc.) must be conveyed to an approved stormwater discharge point, which is commonly a stormwater management facility. To accomplish this, roof drains may be connected directly to a public storm drainage system by means of a lateral pipe. Stormwater from roofs may also drain directly to a public street through a curb if the building's top of foundation is at least 2 feet above the curb elevation. (Two feet is the minimum elevation difference considered necessary to allow for positive drainage for the footing drain.) If roof drains cannot be collected and conveyed to a stormwater management facility, other means of disposal such as seepage trenches shall be identified on the plans. These other methods will be reviewed and approved by the City on a case-by-case basis and shall be discussed in the drainage report.

5.2.2 Onsite Conveyance

The following onsite conveyance system requirements shall be incorporated into the design of the stormwater management plan:

A. The site shall be planned and designed to conform generally to onsite natural drainage patterns and discharge to natural drainage paths within a drainage basin. These natural drainage paths should be modified as necessary to contain and safely convey the peak flows generated by the development.

B. Open channel conveyance systems are preferred over closed conduits where feasible, especially where they might provide opportunities for water quality treatment, wildlife habitat improvement, or emergency overland flood relief routes.

C. In establishing the layout of stormwater networks, flows shall not discharge onto neighboring properties, except as under pre-development conditions.

D. It shall be the responsibility of the owner to provide a conveyance drainage system for all stormwater runoff and/or surface water entering the property from offsite. Surface water, springs, and groundwater shall be incorporated into the drainage design.

E. An overland emergency flow path must be identified and/or designed that allows large flow events to discharge without risk of injury or property damage. The emergency overland flow path must be incorporated into the design and show how a 100-year flow event will be accommodated. The emergency flow shall not be allowed to flow through or inundate an existing building. Any emergency overflow structures shall be designed to accommodate the 100-year design storm.

F. The onsite conveyance system shall be designed to reduce blockages and minimize the likelihood of nuisance flooding or damage to neighboring properties.

5.2.3 Upstream Drainage Basins

Developments are required to convey upstream drainage through or around the development using an integrated approach that plans for future development impacts.

A. The upstream offsite stormwater or other nuisance surface water runoff will be conveyed through the development in a separated conveyance system and will not be mixed with the stormwater collected and treated in onsite stormwater management facilities unless the onsite stormwater management facilities are designed to manage the additional flows from the upstream drainage basin(s), assuming full development potential.

B. Upstream drainage basin analysis shall assume ultimate buildout and/or maximum zoning density in determining the size of the separated conveyance system required through the site.

C. Generally, land use zoning adopted by the local planning agency will be used to size the capacity of the separated conveyance system for upstream basins.

5.2.4 Downstream Drainage Conveyance

The following downstream drainage conveyance system requirements shall be incorporated into the design of the stormwater management plan:

A. Stormwater runoff discharges shall not adversely affect the safety and/or flooding potential of adjacent or downstream property owners.

B. If the downstream analysis crosses the jurisdictional boundary of another surface water management agency, that agency must be notified and given the opportunity to review and comment on the analysis.

C. A written downstream analysis shall document existing conditions and demonstrate adequate conveyance capacity of the natural and constructed drainage system downstream of the project site.

D. The downstream analysis shall extend to the distance where the project site contributes less than 15 percent of the cumulative tributary drainage area **or** 1,500 feet downstream of the approved point of discharge, whichever is greater. In capacity constrained areas, the City may extend the distance of the required downstream analysis.

E. When downstream drainage conveyance systems are inadequate or systems are determined to be undersized, or when, in the opinion of the City, property or properties may be adversely affected by the existing and/or proposed stormwater release rates, the applicant may provide additional onsite stormwater flow control measures to reduce contributions to the downstream system, or correct and/or improve downstream drainage conditions so that the proposed stormwater release rates do not have to be restricted further.

F. The applicant is responsible to replace, repair, upsize, construct, or reconstruct the downstream conveyance system to provide the capacity necessary to develop the property. The downstream conveyance system may include any open or closed public or private stormwater conveyance system.

G. The applicant is required to identify all offsite downstream conveyance restrictions and the cost of upsizing/improving these conveyance systems to meet the minimum conveyance requirements established in this chapter.

H. Any offsite improvements will be the requirement and responsibility of the applicant to obtain easements, design approval, and authorization from all owners of any property and/or agency with the authority to regulate the activity. All agreements, easements, authorization, and approvals shall be acquired prior to stormwater management plan approval.

I. Where no conveyance system exists at the adjacent down gradient property line and the discharge was previously un-concentrated or significantly lower concentrated flow, measures must be taken to prevent adverse downstream impacts.

5.3 Stormwater Conveyance Design Methods

The following section describes accepted criteria and methods for analyzing and designing stormwater conveyance systems. It is the responsibility of the project engineer to determine the appropriate method of analysis in determining the capacity of the proposed conveyance system.

5.3.1 Design Event

The design event for sizing each component of the stormwater conveyance system is determined based on the size of the contributing drainage area and the type of convey-

ance system being designed. The design events for conveyance system sizing are listed in **Table 5-1**. Design rainfall intensities and 24-hour storm events are included in **Section 5.3.3 and 5.3.4**.

Table 5-1. Conveyance System Design Storms

Contributing drainage area	Design storm for conveyance system sizing		
	Storm sewer, culverts, and outfall pipes[a]	Creek or stream channels	Bridges
Less than 40 acres	10-year, 24-hour storm	10-year, 24-hour storm	100-year, 24-hour storm
40 to 640 acres	25-year, 24-hour storm	25-year, 24-hour storm	
640 acres or greater	50-year, 24-hour storm	50-year, 24-hour storm	

[a] *When a backwater condition exists, the storm drain system shall be designed to convey and contain at least the peak runoff for the 25-year design storm as described in* ***Section 5.3.6.***

5.3.2 Design Methodology

The following are general design considerations for conveyance sizing requirements:

A. Conveyance systems shall be designed and constructed to carry the design storm flowing full with no pressure flow. Flow conditions in existing pipe systems will be evaluated on a case-by-case basis for adequacy.

B. Conveyance systems in the public right-of-way (ROW) shall be designed as gravity systems, without the use of stormwater pumps. Privately-owned and maintained stormwater pumps may be allowed with City approval as described in **Section 5.13**.

C. The Rational Method for computing peak discharge is preferred by the City. The Rational Method shall be used for all existing and proposed conveyance systems that receive drainage from contributing areas of 25 acres or less <u>and</u> that have a time of concentration (Tc) of less than 100 minutes. For all other conditions, an approved hydrograph method (ex. Santa Barbara Urban Hydrograph (SBUH), Natural Resources Conservation Service (NRCS) Method, or Technical Release 55 (TR-55)), stormwater management model (SWMM), or other standard method as approved by the City shall be used.

D. Manning's equation generally shall be acceptable for determining pipe or open channel capacity for drainageways with a contributing area of 50 acres or less. For larger drainage areas, backwater effects shall be included in determining capacity for a drainageway, typically using HEC RAS or equivalent computer modeling software.

5.3.3 Rational Method

The Rational Method is most applicable for runoff estimates from small drainages with large amounts of impervious area, as is typical within Oregon City. When using the Rational Method, refer to the Oregon Department of Transportation (ODOT) *Hydraulics Manual* for calculation formulas and tables of coefficients.

When using the Rational Method, the following limitations shall apply:

A. Use the Rational Method only for predicting a conservative peak flow rate to be used in determining the required capacity for conveyance elements. The Rational Method shall not be used to size stormwater management facilities.

B. The drainage sub-basin area cannot exceed 25 acres and the time of concentration shall not exceed 100 minutes for a single calculation.

C. The rainfall intensity (I) should be based on the rainfall intensity, duration, and frequency curve shown in **Figure 5-2**.

D. In computing the Time of Concentration (Tc) for smaller basins, the largest and most significant component in the total Tc is the portion of the time devoted to sheet flow. For this reason, extreme care should be given to determining the true travel time for the sheet flow component of the Tc. In calculating the total Tc, the following limitations will apply:

   1. The flow segment used for the sheet flow component shall not extend for more than 300 feet. The use of a distance of less than 200 feet on a pre-developed land use will require supporting documentation, such as photographs that show evidence of shallow concentrated flow at the point of transition.

   2. For segments of the Tc route that flow through closed conveyance facilities such as pipes and culverts, use standard hydraulics formulas for establishing velocity and travel time.

   3. For segments of the Tc route that flow through lakes or submerged wetlands, travel time is normally very short. The travel time can be determined using an appropriate storage routing technique, or it can be assumed to be zero.

   4. The minimum total Tc used in the runoff calculations shall be 5 minutes.

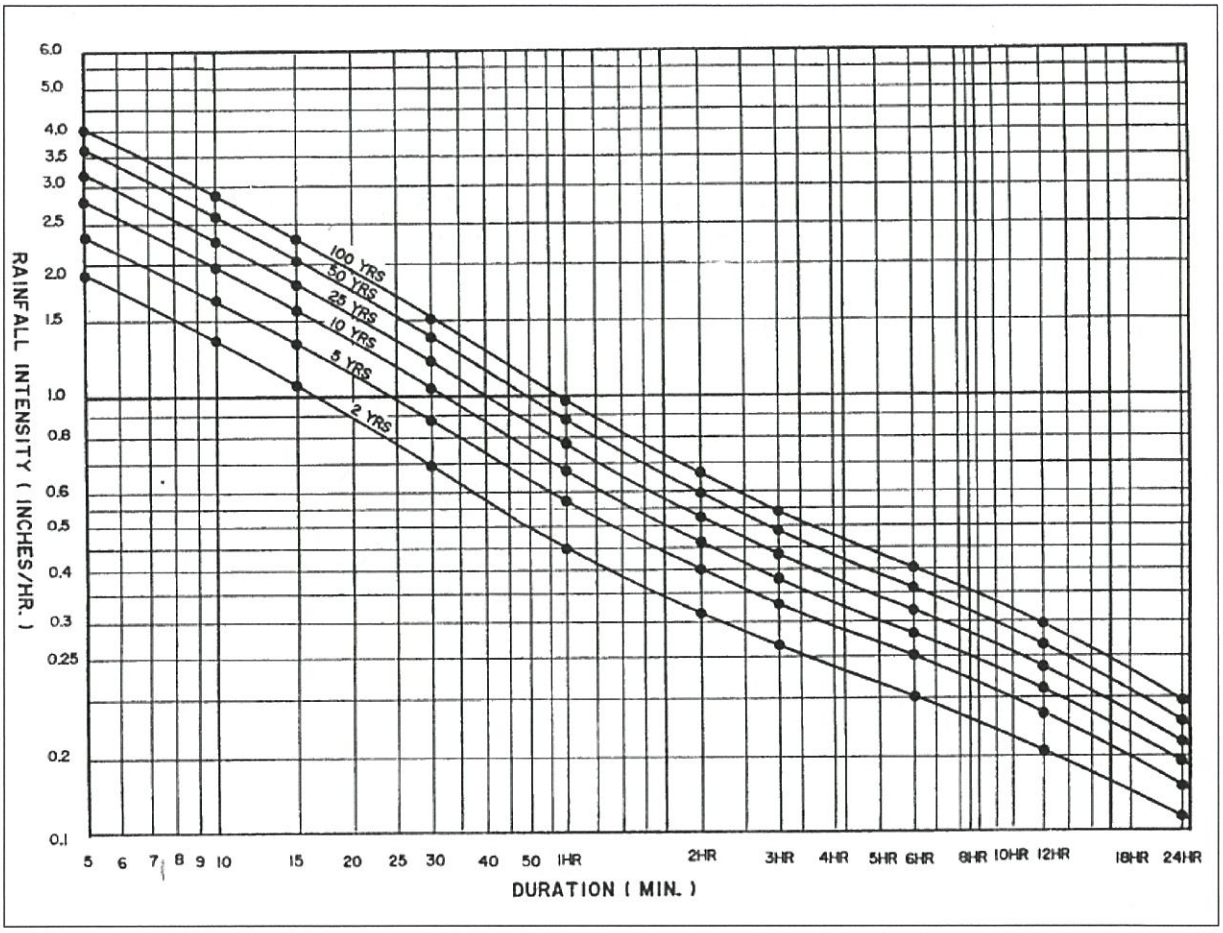

Figure 5-2. Rainfall intensity, duration, and frequency curves for Oregon City

Source: Oregon City Storm Drainage Master Plan, 1988

5.3.4 Hydrograph Method

When storm runoff conveyance design calculations are based on SBUH, TR-55 or the SWMM method, the calculations shall have the following limitations:

A. The rainfall distribution to be used within the city is the design storm of 24-hour duration based on the standard NRCS Type 1A rainfall distribution using the 24-hour precipitation isopluvials in the National Oceanic and Atmospheric Administration Atlas 2, Volume 10, *Precipitation-Frequency Atlas of the Western United States*. The depth of rainfall for the 2 through 100-year 24-hour storm events is shown below in **Table 5-2**.

B. Curve numbers shall be derived from the NRCS runoff curve numbers contained in TR-55 *Urban Hydrology for Small Watersheds*.

C. Soil types shall be derived from the NRCS Soil Survey for Clackamas County.

D. A maximum overland distance for sheet flow used in calculations shall be 300 feet.

E. The minimum time of concentration shall be 5 minutes.

See **Appendix H** for additional guidance on performing hydrograph method calculations.

Table 5-2. 24-hour Rainfall Depths in Oregon City

Recurrence Interval, Years	24-Hour Depth, Inches
2	2.8
10	3.5
25	4.0
50	4.4
100	4.5

Source: NOAA Atlas 2, Volume X

5.3.5 Capacity Analysis: Non-pressure Flow

Storm drains that are designed to operate at full or partially-full conditions during the design storm are called non-pressure flow. The capacity of pipe systems and open channels, for non-pressure flow conditions, can often be estimated using Manning's equation for steady uniform flow as follows:

Manning's Equation

$$Q = \left(\frac{1.486}{n}\right) AR^{2/3}S^{1/2}$$

or

$$V = \left(\frac{1.486}{n}\right) R^{2/3}S^{1/2}$$

where: Q = flow in cubic feet per second (cfs)

n = coefficient of roughness

A = cross sectional area of flow in square feet

V = Velocity, fps

R = hydraulic radius in feet = A/WP

(WP = wetted perimeter = length, in feet, of the wetted contact between a flow of water and its containing channel, measured at right angles to the direction of flow)

S = hydraulic slope (or hydraulic grade line) in feet per foot

The hydraulic slope or hydraulic grade line (HGL) is defined by the elevations to which water will rise in small vertical pipes, located at various locations along the flow. In a non-pressure flow condition, the hydraulic slope can be assumed to be parallel with the flow line slope. The HGL is separated from the energy line by the velocity head. The energy grade line is the sum of the HGL, the velocity head, friction loss, and the incidental losses. Manning's equation does not take into account entrance, exit, bend, and junction losses within catch basins or manholes.

Typical values for the hydraulic roughness coefficient (Manning's n) for conduits and channels can be found in **Tables 5-3 and 5-4**. Refer to the ODOT *Hydraulics Manual* for additional hydraulic roughness values.

This capacity estimate using the Manning equation is acceptable for final design purposes if the conveyance system does not have tailwater influence (such as discharge into a partially full detention basin) or abrupt changes in channel cross-section or slope that might cause non-uniform flow.

Table 5-3. Normal Range Hydraulic Roughness Coefficient (Manning's n) for Conduits

Type of Pipe Material	Manning's n (normal)
Concrete	0.013
Ductile iron	0.012
Corrugated metal (CMP) - annular - 2-2/3" x 1/2"	0.024
CMP - annular – 3" x 1"	0.027
CMP - annular – 6" x 2"	0.032
CMP - helical- 2-2/3" x 1/2"	
12-inch diameter	0.013
18-inch diameter	0.015
24-inch diameter	0.017
36-inch diameter	0.021
48-inch diameter	0.023
60-inch diameter and larger	0.024
Corrugated high-density polyethylene (CPEP) - single wall	0.024
CPEP - smooth wall	0.012
Spiral rib metal	0.011
Poly-vinyl chloride (PVC)	0.011
High density polyethylene (HDPE) - butt fused	0.009

Note: These n values are the "normal" range hydraulic roughness coefficient values for use in the analysis of conduits. Refer to the ODOT Hydraulics Manual *for additional reference values.*

Table 5-4. Normal Range Hydraulic Roughness Coefficient (Manning's n) for Channels

Type of channel	
Constructed	**Natural**
A. Earth, straight and uniform	**A. Minor streams (top width at flood stage less than 100 feet)**
1. Clean, recently completed 0.018	1. Streams on plain
2. Clean, after weathering 0.022	a. Clean, straight, full stage, no rifts or deep pools 0.030
3. Gravel, uniform section, clean 0.025	b. Same as above, but more stones and weeds 0.035
4. With short grass, few weeds 0.027	c. Clean, winding, some pools and shoals 0.040
B. Earth, winding and sluggish	d. Same as above, but some weeds and stones 0.045
1. No vegetation 0.025	e. Same as above, lower stages, irregular slopes and sections with more ineffective flow area 0.048
2. Grass, some weeds 0.030	f. Same as d, but more stones 0.050
3. Dense weeds or aquatic plants in deep channels 0.035	g. Sluggish reaches, weedy, deep pools 0.070
4. Earth bottom and rubble sides 0.030	h. Very weedy reaches, deep pools, or floodways with heavy stand of timber and underbrush 0.100
5. Stony bottom and weedy banks 0.035	2. Mountain streams, no vegetation in channel, banks usually steep, trees and brush along banks submerged at high stages
6. Cobble bottom and clean sides 0.040	a. Bottom: gravels, cobbles, and few boulders 0.040
C. Rock cuts	b. Bottom: cobbles with large boulders 0.050
1. Smooth and uniform 0.035	**B. Floodplains**
2. Jagged and irregular 0.040	1. Pasture, no brush
D. Channels not maintained, weeds and brush uncut	a. Short grass 0.030
1. Dense weeds, high as flow depth 0.080	b. High grass 0.035
2. Clean bottom, brush on sides 0.050	2. Cultivated areas
3. Clean bottom, brush on sides, highest stage of flow 0.070	a. No crop 0.030
4. Dense brush, high stage 0.100	b. Mature row crops 0.035
	3. Brush
	a. Scattered brush, heavy weeds 0.050
	b. Light brush and trees 0.050
	c. Medium to dense brush 0.070
	4. Trees
	a. Dense willows, straight 0.150
	b. Cleared land with tree stumps, no sprouts 0.040
	c. Cleared land with tree stumps, heavy growth of sprouts 0.060
	d. Heavy stand of timber, a few down trees, little undergrowth, flood stage below branches 0.100
	e. Same as above, but with flood stage reaching branches 0.120

Note: The n values listed above are the "normal" range hydraulic coefficient values for use in the analysis of open channels. For conservative design of channel capacity, the "maximum" values listed in the ODOT Hydraulics Manual *should be considered. For channel bank stability calculations, the "minimum" values listed in the ODOT* Hydraulics Manual *should be considered.*

5.3.6 Capacity Analysis: Pressure Flow

A backwater analysis shall be included in the stormwater management plan for the following circumstances:

A. Where uniform flow is not expected or where losses within the system may cause surcharging of water.

B. A discharge into a tailwater condition, such as a partially full stormwater detention pond or into a partially full channel.

C. Culvert entrances.

D. Ditch inlet location where backwater effect could cross a property line.

E. Other locations as determined by the City Engineer.

The backwater analysis shall be to a point where non-pressure flow at the design storm flow rate is re-established.

When a backwater condition exists, the storm drain system shall be designed to convey and contain at least the peak runoff from the 25-year design storm or the design storm dictated by **Table 5-1**, whichever is larger.

Structures for proposed pipe systems must be designed to provide a minimum of 1 foot of freeboard between the HGL and the top of the stormwater structure and appurtenances or finish grade above the pipe during the design flow. Surcharge in pipe systems shall not be allowed if it will cause flooding in portions of a structure, including below-floor crawl spaces and basements.

5.3.7 Hydrologic and Hydraulic Calculation Reporting

Design hydrologic and hydraulic data for each reach of a proposed storm drain system shall be included in the stormwater management plan submittal. It is the responsibility of the project engineer to determine the best way to document the design analysis for presentation in the report. Conveyance calculations shall include the following items:

A. Description and sketch of the storm drain system including pipe size, slope, and material for each segment of the system.

B. Description and sketch of the contributing area (curve number value or equivalent, as well as the size).

C. Time of concentration calculations including assumed coefficients, flow path lengths, and slope.

D. Capacity analysis calculations as outlined in **Sections 5.3.5** and **5.3.6**.

E. Design flow calculations, including assumed coefficients and design storm.

F. Design flow rate for all pipe and open channel segments of the conveyance system.

G. HGL and ground surface elevation at each structure and outlet location. It is preferable to show this information on a profile plot on an engineering scale, though spreadsheet tables are acceptable. When spreadsheet tables are used in place of a profile plot, include the distance between the ground surface and the HGL at each structure and outlet location.

H. Flow velocity at outlet structures and in open channels.

5.4 Open Channels

The following section describes accepted criteria and methods for designing open channel conveyance systems such as swales and ditches.

5.4.1 Geometry

Open channel geometry shall meet the following criteria:

A. Constructed open channels shall be sized to pass the design flows listed in **Table 5-1** without causing erosion.

B. Channel side slopes shall be no steeper than two-horizontal to one-vertical (2h:1v) for undisturbed ground (cuts), as well as for disturbed ground (embankments). All constructed channel slopes shall conform to compaction guidelines in **Chapter 3**.

C. A low-flow channel within the main channel, designed to carry 10 percent of the design storm, will be required for channels with a design flow of greater than 20 cubic feet per second (cfs). Side slopes for the low-flow channel shall not exceed 2h:1v and shall be stabilized to the satisfaction of the City Engineer. The minimum stabilization material shall be seeded matting or approved equivalent.

D. Channel design along curves shall be curvilinear with a 100-foot minimum radius. Tighter curves may be used if the City Engineer determines that sufficient erosion control has been incorporated into the design to maintain stable bank conditions following development.

E. Channels shall be designed to provide sufficient freeboard so as not to saturate any adjacent public road base with design storm peak flows. Channels shall have a minimum freeboard of 6 inches when the design discharge is 10 cfs or less and 1 foot when the design discharge is greater than 10 cfs. Extra freeboard may be required for curved segments of an open channel.

5.4.2 Channel Lining and Infiltration

Every opportunity should be taken to design open channels to provide infiltration throughout an entire drainage system. Engineers are also encouraged to consider innovative means of collecting and conveying runoff to incorporate infiltration into the drainage system design.

Protection for open channels shall meet the following criteria:

A. Vegetation-lined channels shall be used whenever practicable. Rock-lined channels shall be used only where a vegetative lining will not provide adequate protection from erosion.

B. If the channel has a flow line slope of 6 percent or greater or a peak design velocity that exceeds 4.0 feet per second (fps), the channel shall incorporate rock lining or riprap energy dissipation devices designed by a qualified Professional Engineer. Channel protection shall be based on the minimum level of protection listed in **Table 5-5**.

C. Where riprap protection is specified, riprap shall be placed over a woven geo-textile fabric.

D. No protruding pipes, culverts, or other structures which reduce or hinder the flow characteristics of the channel will be allowed. Channel connections shall be designed to prevent scouring. All pipe connections shall match side slopes and incorporate a headwall.

E. All channel sides and bottoms shall be seeded, sodded, or rock-lined immediately following excavation, regardless of mean flow velocity.

Table 5-5. Protection for New Channel Construction

Velocity at design flow, fps		Required protection	Thickness, feet	Minimum height above design water surface, feet
Greater than	Less than or equal to			
0	5	Vegetation lining	Not applicable	0.5
5	8	Bioengineered lining	Not applicable	1
		ODOT Class 50 riprap[a]	1.5	
8	12	ODOT Class 200 riprap	2.5	2
12	20	Slope mattress, etc.	Varies	2
20		Engineer-designed		

[a] *The City may require ODOT Class 100 Riprap on an as-needed basis.*

5.4.3 Open Channel Location

New open channels in residential areas shall be in private or public easements and recorded on plat maps with the following restrictions:

A. Property owner shall not alter the drainageway without approval of the City Engineering Division.

B. Property owner shall not place any structure or fence within the normal high-water area of the open channel.

C. Property owner shall not introduce foreign material such as grass clippings within the high-water area of the open channel.

5.4.4 Check Dams

Check dams are not recommended for use in conveyance channels due to the problems they pose for routine maintenance operations. However, check dams are recommended for use in temporary or permanent channels as an erosion and sedimentation control device (see **Chapter 7**) and for stepping down channels being used for infiltration. Where check dams are proposed, they shall be spaced at maximum 2-foot elevation intervals.

5.4.5 Work Near Existing Natural Channels

All work near natural channels shall be consistent with Oregon City Municipal Code (OCMC Title 17) Natural Resource Overlay District (NROD) requirements.

5.5 Culverts

Culverts, for the purposes of this manual, are single runs of pipe that are open at each end and do not have structures such as catch basins or manholes. Culverts designed for fish passage are governed by the Oregon Department of Fish and Wildlife and often require additional design considerations such as depth of flow and velocity that may differ considerably from the design requirements included herein. When conflicts exist, the applicant shall work with the City and the regulating agency to establish the appropriate design criteria.

5.5.1 Culvert Design Criteria

Stormwater conveyance culverts shall meet the following design criteria:

A. Maximum design headwater depth shall be 1.5 times the diameter of the culvert, with no saturation of roadway subgrade.

B. Minimum culvert diameters are as follows:

For cross-culverts under public and private roadways: minimum 18 inches.
For all other roadway culverts, including driveway culverts: minimum 12 inches.

C. No bends shall be permitted in culvert pipes.

D. Minimum cover, as measured from the top of pipe to finished grade:

1. Under roads classified as collectors or higher: 2 feet.
2. If Class 52 ductile Iron pipe is used, the cover may be reduced to 1 foot.
3. PVC and HDPE shall require a 2-foot minimum cover in any public roadway area.
4. Pipe covers of less than the above stated minimums may be permitted on a case-by-case basis. These may require a designed reinforced concrete cover that will distribute roadway use (traffic) forces to a foundation area to the sides of the pipe.
5. Reinforced concrete box (RCB) culverts with no cover requirement may be permitted on a case-by-case basis. Signed and sealed structural design calculations shall be submitted for review (this requirement may be waived for pre-cast RCB culverts with covers greater than 2 feet). In culverts with no cover, the clearance from the roadway surface to the reinforcing steel shall be no less than three inches and the 30-day concrete strength shall be no less than 4,500 pounds per square inch.

E. Maximum culvert length without access structures is 300 feet.

F. Minimum separation from other utility pipes and conduits (as measured from the outside edge of pipe) is 6 inches vertical, 3 feet horizontal, unless otherwise specified by the purveyor of the utility in question.

G. Controlled Density Fill (CDF or CLSM) shall be used for any pipes with less than 12" separation.

H. Pipe bedding and backfill shall conform to City's Public Works standards.

I. The entrances and outlets to all culverts shall be stabilized with quarry rock or other energy dissipation methods to minimize scouring of the channel bottom and sides.

These shall be designed by a Professional Engineer using published references such as Hydraulic *Design of Energy Dissipaters for Culverts and Channels* (U.S. Department of Transportation, Federal Highway Administration) and other references.

J. Rock protection at culvert entrances should extend upstream a minimum of 5 feet and shall have a minimum height of 1 foot above the design headwater elevation. Rock protection at the culvert outlet shall have the greater of:

A minimum height of 1 foot above the design tailwater elevation
1 foot above the crown of the pipe

K. When two parallel pipes are installed, the minimum separation between the exterior pipe walls shall be 3 feet or half the diameter of the larger pipe, whichever is greater. Pipe separations less than the stated minimum may be permitted on a case-by-case basis.

5.5.2 Culvert Materials

The culvert materials listed in **Table 5-6** are approved for use for culverts, subject to the limitations listed in the table or in **Section 5.5.1**.

5.5.3 Headwalls/Endwalls

Concrete headwalls/endwalls or other approved end protection are required where pipe material other than concrete or ductile iron is exposed in the design of an outlet or inlet pipe or where required to stabilize the slope.

Headwalls and endwalls should be built high enough to support the full depth of pipe cover recommended by pipe manufacturer. Headwalls and endwalls built to the proper height improve pipe capacity during extremely high flows and help prevent pipe blockage, road washouts, and compounding damage caused by pipe failure.

No plastic pipes shall be exposed, which may require pipe transitions from underground plastic to exposed ductile iron pipe or mitered pipe end matching the slope with a paved concrete end slope 18-inch minimum around end of pipe.

5.5.4 Location

Culverts located within the structural street section shall be placed as shown on the City's Standard Drawing for utility placement location.

5.6 Pipe Systems

Pipe systems are comprised of more than one run of pipe and include at least one junction type of structure such as a catch basin or manhole. The following section describes accepted criteria and methods for designing pipe systems.

5.6.1 General Pipe Design Criteria

Pipe systems shall meet the following design criteria:

A. **Minimum cover**, as measured from the top of pipe to finished grade:

1. Minimum cover of 2-feet under collector and above roads.

2. If Class 52 ductile iron pipe or Class V concrete pipe is used, the cover may be reduced to 1 foot.
3. PVC and HDPE shall require a 2-foot minimum cover in any public roadway area.
4. In areas of relatively flat terrain, the project engineer must show that sufficient depth is provided at the boundary of the development to properly drain the remainder of the upstream basin area tributary to the site.
5. The Oregon Structural Code (OSC) typically requires 1-foot minimum cover on private property where the system will be privately maintained.
6. Pipe covers of less than the above stated minimums may be permitted on a case-by-case basis, as approved by the City Engineer.

B. **Velocity**

1. Minimum velocity: 3 fps at design flow rate.
2. Maximum velocity: 15 fps at design flow rate.
3. Where velocities greater than 10 fps are attained, special provision shall be required to protect structures against pipe erosion and displacement by shock. Energy dissipaters located on sloping land are of particular concern. This condition shall be studied in each case and the results of the study shall be documented in the drainage report.

C. **Slope**

1. Minimum pipe slope of 0.5 percent. Exceptions may be made for topographic constraints, provided the minimum flow velocity is maintained, if approved by the City Engineer.
2. Storm drains laid on slopes of 20 percent or greater shall be secured by anchor walls. Concrete pipe shall not be used when slopes exceed 25 percent due to the potential for joint displacement from differential settlement.

D. **Pipe Diameter**

1. Minimum of 12-inch pipe diameter for stormwater systems within the right-of-way.
2. Storm lines shall not decrease in size as they move downstream, regardless of the slope provided on the pipe.
3. Engineers shall not specify sewers of sizes which are obviously larger than is necessary for satisfactory carrying capacity, but which are specified in order to meet grade requirements (i.e., a fifteen inch (15") pipe for a twelve inch (12") pipe to acquire a decrease in slope).

E. Maximum pipe length of 400 feet between access structures.

F. Minimum separation of 6 inches vertical, 3 feet horizontal from other utility pipes and conduits, unless otherwise specified by the purveyor of the utility in question. The separation shall be measured from the outside edge of pipe.

G. **Debris grates** shall be installed at all inlets where an open channel discharges to a piped drainage system. Additionally, debris grates are required at all outlets of piped systems where the pipe is 18 inches in diameter or larger.

H. **Pipe trench backfill** – Bedding and backfill shall conform to the City's Public Works standards.

I. **Alignment**

1. Storm drains shall be laid on a straight alignment. Horizontal curves that conform to the street curvature may be approved if joints with rubber gaskets are used for all curved storm drains. Minimum radii shall be 115 percent of the pipe manufacturer's recommendation.
2. Changes of alignment greater than 45 degrees at any main flow structure for the main flow are undesirable. Changes of alignment greater than 90 degrees for the main flow will not be allowed.
3. Side pipes will join in such a manner that all flows enter the manhole point downstream. Side pipes with discharges pointed in an upstream direction will not be allowed.

5.6.2 Pipe Material

The pipe materials listed in **Table 5-6** are approved for use in pipe systems, subject to the limitations listed in the table and **Section 5.6.1**.

Table 5-6. Approved Pipe and Culvert Materials [a]

- Reinforced Concrete Pipe, ASTM C-76, Class III minimum. Watertight joints required.
- Ductile Iron; Class 50 wall thickness for pipe sizes up to 12 inches; Class 51 wall thickness for 14 inch and larger; watertight gaskets required.
- Corrugated high-density polyethylene pipe (HDPE) - smooth interior, maximum 30-inch diameter conforming to American Association of State Highway and Transportation Officials (AASHTO) M-294, Type S) with watertight gaskets. Concrete headwalls are required for any exposed ends.
- PVC seamless pipe with watertight gaskets:
  - ASTM 3034 SDR 35 for pipes up to 15-inch-diameter
  - ASTM F679, for pipes 18 to 27 inches in diameter
  - ASTM C900 DR18 for pipes up to 12-inch-diameter
  - ASTM C905 DR 25 for pipes 14 to 30 inches in diameter
  - ASTM F-794 for pipes up to 30-inch-diameter
  - Concrete headwalls are required for any exposed ends
  - ADS N-12 or equivalent

[a] *These pipe materials are allowed for public storm drainage conveyance systems. The City Engineer may adopt or approve other pipe materials or specifications due to technology developments.*

5.6.3 Connections to Pipe Systems

For all piped public drainage systems, excluding roof and foundation line, connections may only be made at a structure, such as at a catch basin or manhole. Tees, wyes, saddles, or other types of connections to storm drainage pipes for other than roof and foundation line will not be permitted unless approved by the City Engineer.

Lateral connections within the ROW shall not exceed half the diameter of the mainline and cannot exceed 8 inches in diameter. For larger connections, a structure for maintenance access is required.

Private storm drains outside the public ROW shall not be less than 6 inches in diameter and must meet local plumbing authority codes.

Storm pipes serving only roof drain laterals with no expectation for upstream future connections may be 8 inches in diameter. Storm sewer service laterals serving an individual house or small commercial property shall be 6 inches in diameter or as approved by the City.

5.6.4 Location

Where storm drains are being designed for installation parallel to other utility pipe or conduit lines, the vertical location shall be in such a manner that will permit future connections. The design must also avoid conflicts with parallel utilities without abrupt changes in vertical grade.

5.6.5 Storm Drains in Streets or Easements

All public storm drains not located in streets shall be in easements. See City's Standard Drawings for "Typical Utility Placement Detail."

If streets have curved alignments, whenever possible, the storm drain alignment shall be parallel with water and sanitary lines with a minimum separation of 10 feet with sanitary and 6 feet with water. The intent is to prevent conflict with sanitary and water lines while providing the fewest manholes required to traverse on curve and prevent a conflict with survey monuments required by OCMC.

Storm drains in easements will be allowed only after all reasonable attempts to place the drains in the ROW have been exhausted. Provisions shall be made for vehicular access to manholes for preventive maintenance and emergency service. See **Section 5.9** for more discussion on easements.

5.6.6 Relation to Creeks and Drainage Channels

Storm drain lines shall enter a creek or drainage channel at 90 degrees or less to the direction of the flow. The outlet shall have a headwall and scour pad or riprap to prevent erosion of the existing bank or channel bottom. The size of the pipe and channel being entered will govern which protective measures are required.

5.7 Structures

The following are design criteria for conveyance system structures.

5.7.1 Manholes

A. Manholes or curb inlets with manhole-type access shall be installed at all pipe junctions where the depth from rim to invert exceeds 4 feet or where the pipe is 18 inches in diameter or greater.

B. Manholes shall conform to the City's applicable standard drawings.

C. Where minimum vertical distance is proposed between inlet and outlet pipes in a manhole (or inlet structure serving as a junction structure), pipes must be aligned vertically by one of the following criteria, in order of preference:

1. Match pipe crowns
2. Match 80 percent diameter of pipes
3. Perform backwater analysis

D. Manholes shall be required at, but not limited to, the following locations:

1. Changes in vertical grade or horizontal alignment of storm drain pipes
2. Change in size of storm drain pipes
3. Uppermost extent of storm pipe not opened (daylighted) to receive ditch or other open conveyance flows. Cleanouts are not allowed in this situation.

E. Manholes with pipe horizontal alignment changes of more than 30 degrees in angle shall have the outlet pipe invert at least 0.2 foot in elevation lower than all inflow pipe inverts. This is in addition to the normal grade crossing the manhole.

F. In addition, a minimum 3-foot elevation difference between the rim and the top of pipe at all manholes with more than 30 degrees of alignment change is required. This is to allow for containment of turbulence generated during high flows by such abrupt changes of alignment.

G. Standard depth manhole rim frames shall be installed in all paved street locations.

H. Outside drop manholes shall be used where the difference in the flow line elevations between intersecting storm sewers exceeds 24 inches, except in inlet runs and flow control structures. Inside drop manholes are prohibited unless the drop is 4 feet or less.

I. Manhole rims not in pavement areas, and not in the pavement section of a paved road, shall be set 6 inches above finished grade. Covers shall be bolted down with a minimum of two stainless steel bolts when required by the City Engineer.

5.7.2 Inlet Structures

A. Inlet structures are required at the following locations, but in no case shall they be spaced farther apart than 400 feet:

1. At the ends of all dead-end streets with a descending grade.

2. At intermediate locations so that the maximum gutter flow does not exceed the shoulder width plus 2 feet of the travel lane. This maximum flow is for a 5-minute, 10-year design storm, or 3 inches in depth (measured at the curb face), whichever is less.
3. At all sag points (low points) in vertical curves.
4. On the uphill side of handicap ramps within 20 feet.
5. Inlet structures shall not be located where they will interfere with a handicap ramp.

B. Inlet structures located in street sections where there is curb and gutter shall be a curb inlet per City standards, unless otherwise approved by the City Engineer.

C. Inlet structures that have an outlet pipe located lower than 4 feet below the street flow line shall have minimum inside dimensions of 3 feet 3 inches by 2 feet 3 inches.

D. With the City's written approval, inlet structures may be used in lieu of manholes for the junction of pipes 15 inches or less in diameter, where the depth from rim to invert is less than 4 feet. Pipelines 18 inches in diameter may be connected to the larger dimension of the structure (catch basin) when the structure is formed and poured around the pipe during new construction. The minimum size for a catch basin/inlet structure shall be per the City's requirements.

E. Catch basins with connector storm drains shall connect to a receiving conveyance pipe with a manhole, another catch basin, or curb inlet. Connectors shall only be a maximum of one additional.

F. Gutter tapers are required for all catch basins and gutter/curb inlets and shall conform to the City's Standard Drawings.

G. Ditch and/or area inlets shall be required to intercept existing flows and convey to the appropriate outlet.

5.8 Outfalls

Outfalls from drainage facilities shall be designed with adequate energy dissipaters to minimize downstream damage and erosion. All outfalls with exit velocities of more than 4 fps shall be examined with respect to soil type to ensure adequate erosion control. Unless otherwise approved, an outfall elevation shall be submerged by the receiving creek or channel during a 10-year storm event.

Storm drain lines shall enter a creek or drainage channel at 90 degrees or less to the direction of the flow. The outlet shall have a headwall and scour pad or riprap to prevent erosion of the existing bank or channel bottom. The size of the pipe and channel being entered will govern which protective measures are required.

Engineered energy dissipaters, including but not limited to, stilling basins, drop pools, hydraulic jump basins, baffled aprons, and bucket aprons, shall be designed using published references such as *Hydraulic Design of Energy Dissipaters for Culverts and Channels* published by the Federal Highway Administration of the U.S. Department of Transportation, the ODOT *Hydraulics Manual,* and others. The design reference shall be cited in the stormwater management plan submittal.

Rock protection at outfalls shall be designed in accordance with information listed in **Table 5-7**.

Table 5-7. Rock Protection at Outfalls

Discharge velocity at design flow, fps		Minimum required protection dimensions				
Greater than	Less than or equal to	Type	Thickness, feet	Width	Length (use greater of)	Height over crown, feet
0	5	ODOT Class 50 Riprap[a]	1.5	Diameter + 6 feet	8 feet –OR- 4 x diameter	1
5	10	ODOT Class 200 Riprap	2.5	Diameter + 6 feet	12 feet –OR- 4 x diameter	1
10		Engineered energy dissipater required				

[a] *The City may require ODOT Class 100 Riprap in areas with likelihood of vandalism.*

See the latest version of Oregon Department of Transportation Detail "Culvert Embankment Protection and Riprap Pads" (RD317) for more information.

If the outfall is located in an OCMC defined NROD or a FMOD, additional requirements may apply. A permit from the USACE and/or the ODSL may be required. The applicant is responsible for obtaining the proper permits from the regulating agencies.

5.9 Easements and Setbacks

Drainage easements for the stormwater conveyance system must meet the following criteria:

A. Minimum width of 15 feet, with the exception that private roof and yard drain systems may be located within 10-foot private storm easements.

B. All pipes must be located within the easement so that outside edge of pipe, or top edge of channel, is no closer than 5 feet from its adjacent easement boundary (roof and yard drain pipes shall be centered in the easement).

C. Open channels shall be located within the easement so that the water surface elevation at the top of freeboard is no closer than 5 feet from each easement boundary.

D. The City may require wider easements for large trunk sewers, sewers greater than 10-feet deep, and areas with topographic constraints such as steep slopes or sites where maintenance, repair, or replacement would require a wider easement. When wider easements are required, easement widths shall be increased in 5-foot increments.

All easements must be furnished to the City for review and approval prior to recording. The City has standard utility easement document forms and guidelines for preparation of descriptions and sketches that shall be used for City easements.

5.10 Slope Intercept Drains

Slope intercept drains are allowed at the following locations:

A. Along the upper boundaries of a development where the natural ground slope exceeds 10 percent to prevent drainage from the tributary area above the site.

B. Along the top of all cut slopes which exceed two-horizontal to one-vertical (2h:1v) where the tributary drainage area above the cut slope has a drainage path greater than 40 feet as measured horizontally from the hinge point of the cut.

5.11 Subsurface Drainage

Subsurface drains (underdrains) shall be provided at the following locations:

A. For stability on cut and fill slopes, when required by the City Engineer.

B. For all existing springs or springs intercepted during construction activity for other facilities.

C. Where high groundwater exists or when it is necessary to reduce the piezometric surface to an acceptable level to prevent land slippage or under floor flooding of buildings.

D. Where possible, a minimum slope of 0.15 foot per 100 feet should be used. The subsurface drain must be installed below the water flow to function properly. The use of a geotextile fabric to line the trench is recommended.

5.12 Foundation Drains

The following drainage provisions shall be made for foundation drains in a development:

A. For commercial or industrial developments, foundation drains shall be piped directly to a storm drain system other than a street gutter. Provisions must be taken so that the design HGL of the receiving stormwater facility does not back up into the foundation drain.

B. For single-family residential developments, foundation drains may be piped to the street through a plastic pipe, as required by applicable code, and set in the curb under the following circumstances:

1. The building's top of foundation elevation for the first floor is at least 2 feet above the top of the existing street curb, and
2. The existing street section will not permit runoff to flow horizontally more than 2 feet beyond the discharge point. This is to prevent wetting the road surface, especially during freezing events.
3. Otherwise, foundation drains shall be piped directly to a storm drain system other than a street gutter.

C. Should site topography prevent connecting foundation drains directly to a public storm drain system, the drains for one or more lots shall be piped through a private system to the public storm drain system. This private system shall be located in a dedicated private drainage easement and the property owner shall be responsible for the private system maintenance. Any private storm drain piping shall conform to the Oregon Plumbing Code.

5.13 Design Criteria for Private Stormwater Pumps

Private stormwater pumps will be permitted only after approval by the City Engineer. Any stormwater pumps so permitted must, at a minimum, meet the following criteria:

A. The proposed pump system is not intended to circumvent other drainage requirements.

B. The proposed pump system is the only feasible alternative to flooding.

C. The pump system must provide storage for a minimum of 25 percent of the runoff volume from a 2-year, 24-hour storm event. An emergency backup power source may be required, at the discretion of the City Engineer.

D. The pump system must include dual pumps with an external audible and visual alarm system.

E. The pump system must be capable of discharging a 100-year storm event.

F. Applicants may be required to provide reasonable assurance of no downstream impacts from the implementation of a stormwater pump system.

G. Private conveyance systems for the pump system must transition to gravity flow, prior to entering the public ROW and must have a gravity connection to the public stormwater system.

H. All pump systems must be privately operated and maintained. Prior to final approval of the project served by such a pump system, an agreement establishing responsibility for payment of costs resulting from the operation and maintenance of the pump system must be approved by the City and must be legally recorded.

I. An operations and maintenance plan and maintenance covenant, consistent with **Chapter 8** shall be developed for all private stormwater pumps.

Stormwater and Grading Design Standards

CHAPTER 6

Source Controls

CHAPTER 6. SOURCE CONTROLS

This chapter presents the stormwater best management practice (BMP) source control requirements for site uses and characteristics that have the potential to generate higher levels of pollutants than typical stormwater runoff.

Some site characteristics/uses may generate specific pollutants of concern or levels of pollution that are not addressed solely through implementation of the pollution reduction measures identified in **Chapter 4**. The site characteristics/uses in this chapter have been identified as potential sources of chronic loadings or acute releases of pollutants such as oil and grease, toxic hydrocarbons, heavy metals, toxic compounds, solvents, abnormal pH levels, nutrients, organics, bacteria, chemicals, and suspended solids. This chapter presents controls for managing these pollutants at their source.

6.1 Introduction and Applicability

Source control requirements apply to all developments with high-risk characteristics as defined in **Section 6.1.1** including new development, redevelopment, tenant improvements, or those existing sites proposing new offsite discharges.

Source controls shall be applied to the areas of the site with high-risk characteristics as well as any areas hydraulically connected to a high-risk area. With redevelopment projects, only areas that are being disturbed with the redevelopment are required to make structural source control changes.

6.1.1 Source Control Triggers

Projects with the following site uses/characteristics are considered to be high-risk and are subject to source control requirements. Refer to the applicable section of this chapter and follow the requirements to design source controls for the proposed site use.

- Fuel Dispensing Facilities and Surrounding Traffic Areas (**Section 6.3**)
- Above-Ground Storage of Liquid Materials (**Section 6.4**)
- Solid Waste Storage Areas, Containers, and Trash Compactors (**Section 6.5**)
- Exterior Storage of Bulk Materials (**Section 6.6**)
- Material Transfer Areas/Loading Docks (**Section 6.7**)
- Equipment and/or Vehicle Washing Facilities (**Section 6.8**)
- Stormwater and Groundwater Management for Development on Land With Suspected or Known Contamination (**Section 6.9**)
- Covered Vehicle Parking Areas for Industrial or Commercial Uses (**Section 6.10**)
- Industrial and Commercial High Traffic Areas (**Section 6.11**)
- Land Uses Subject to Oregon Department of Environmental Quality (ODEQ) 1200-Z Industrial Stormwater Permit Requirements (**Section 6.12**)

Applicants are required to address all high-risk site characteristics listed above. For example, if a development includes both a fuel dispensing area and a vehicle washing facility, the source controls in both **Sections 6.3 and 6.8** will apply.

The requirements of this chapter are in addition to the applicable requirements as identified in other chapters of these standards. Developments that have existing or proposed offsite stormwater BMP facilities are not exempt from the source control requirements of this section.

6.1.2 Goals and Objectives for Source Control

The specific source control requirements are based on the following goals and objectives:

A. Prevent stormwater pollution by eliminating pathways that may introduce pollutants into stormwater.

B. Protect soil, groundwater, and surface water by capturing pollutants and reducing impacts to the environment.

C. Issue permits for the wastewater discharges and areas with the potential for relatively consistent wastewater discharges (such as vehicle washing facilities) to the sanitary sewer system, excluding non-contaminated stormwater runoff.

D. Direct areas that have the potential for pollutant releases or accidental spills and are not expected to regularly receive flow or require water use (such as covered fuel islands or covered containment areas) to an approved method of containment or disposal.

E. Safely contain spills onsite, avoiding preventable discharges to any storm sewers, sanitary, and/or drainageways.

F. Emphasize structural BMP controls over operational procedures. Structural BMP controls are not operator-dependent and are considered to provide more permanent and reliable source control. Any proposals for operation-based source controls need to describe the long-term viability of the maintenance program.

6.1.3 Request for Alternative Method of Source Control

Applicants may request an alternative method of source control as part of the regular modification request process outlined in **Chapter 1**, though such a request may delay issuance of related site development, building and/or plumbing permits. Alternative methods of source control must be reviewed and approved by the City during the planning process.

6.1.4 Other Applicable Codes or Regulations

Some facilities may be required to obtain a National Pollutant Discharge Elimination System (NPDES) Industrial Stormwater General Permit 1200-Z issued by ODEQ before discharging to the City's storm sewer system or to waters of the state. The 1200-Z permit includes discharge benchmarks for facilities with industrial activities that are exposed to rainfall and stormwater runoff. The state also has water quality standards listed in Oregon Administrative Rules 340 Division 041 for discharges to surface waters.

Applicants may be required to obtain an Industrial Wastewater Discharge Permit from the wastewater service provider for discharges to the sanitary sewer system. Facilities subject to these requirements are generally commercial or industrial. Typical discharges include process wastewater, cooling water, or other discharges generated by some of the sources in this section that drain to a storm or sanitary sewer system.

Conformance with the requirements of this section does not relieve the applicant of other applicable local, state, or federal codes or regulations. Other applicable regulations may include the hazardous substances storage requirements of articles 79 and 80 of the Oregon State Fire Code; the Spill Prevention, Countermeasure, and Containment (SPCC) regulations of the U.S. Environmental Protection Agency's (USEPA) 40 Code of Federal Regulations (CFR) 112; the Resource Conservation and Recovery Act (RCRA); Willamette Basin total maximum daily load programs regulated by the ODEQ; or any other applicable local, state, or federal regulations or permit requirements.

In the event of a conflict, the most stringent local, state, or federal regulations generally apply.

6.2 Requirements for All Sites

The following requirements apply to all sites subject to source control.

6.2.1 Signage Requirements

Informational signage is required for some site uses and activities that have the potential to contaminate stormwater. Proper signage addresses good housekeeping rules and provides emergency response measures in case of an accidental spill.

All signage shall conform to the following requirements:

A. Signs shall be located and plainly visible from all activity areas.

B. More than one sign may be needed to accommodate larger activity areas.

C. Signs shall be water and weather resistant.

D. Signs shall include the following information:
   - Safety precautions
   - Immediate spill response procedures
     (for example: "Turn the valve located at..." or "Use absorbent materials")
   - Emergency contact(s) and telephone number(s)

E. Signs may need to be in more than one language if required to communicate effectively with employees and delivery personnel.

F. Signs may need to meet retro-reflectivity standards dependent on the use and intent of the sign.

G. All signage shall comply with pertinent OCMC requirements.

Additional signage requirements for specific activities are noted in applicable sections.

6.2.2 Spill Control

Spill response supplies, such as absorbent material, containment booms, and protective clothing, shall be available at all potential spill areas. Any applicable spill response supplies need to be clearly marked and located where the signage is posted and near the high-risk activity area. The spill response supplies should be appropriate to the nature of the potential risk present at the site. More than one spill response kit may be necessary to accommodate larger activity areas.

Employees should be familiar with the site's operations and maintenance (O&M) plan; SPCC plan; and/or proper spill cleanup procedures.

6.2.3 Public Sanitary Sewer Discharge Permit

Connection/discharge to the public sanitary sewer system requires prior written approval by the City. A request to discharge to the public sanitary system shall be submitted as part of the permitting process.

6.2.4 Source Control Submittal

Applicants shall show the locations of proposed structural source controls (including spill control manholes and shutoff valves) and include documentation of high-risk site uses and the applicable source controls as part of the Stormwater Management Plan Submittal (**Chapter 9**).

6.3 Fuel Dispensing Facilities and Surrounding Traffic Areas

The requirements in this section apply to all development where vehicles, equipment, or fuel tanks are refueled on the premises, whether a large-sized gas station, a single-pump maintenance yard, or a small-sized fuel tank. A fuel dispensing facility is defined as the area where fuel is transferred from bulk storage tanks to vehicles, equipment, and/or mobile containers (including fuel islands, above- or below-ground fuel tanks, fuel pumps, and the surrounding pad). Propane tanks are exempt from the requirements of this section.

Existing fueling areas are not required to install source controls identified in this section if the scope of work is limited to the following:

- A new canopy installation over an existing fuel pad that is not being upgraded.
- An underground tank replacement for compliance with state regulations.
- The replacement of a fuel pump on an existing fuel pad that is not being upgraded.

6.3.1 Discharge Permit

The applicant shall apply and obtain a permit from the City for any discharge or point of connection to the public stormwater system. Discharges of hydrocarbons are prohibited to the public sanitary and storm sewer systems. When a containment or storage device is utilized, the owner or responsible person shall contact the appropriate authority for authorization prior to opening any valve and discharging to a public sanitary or stormwater sewer system.

6.3.2 Cover

The fuel dispensing area shall be covered with a permanent canopy, roof, or awning so precipitation cannot come in contact with the fueling activity area. Rainfall shall be directed from the cover to a stormwater disposal point that meets all applicable code requirements.

- **Covers 10 feet high or less** shall have a minimum overhang of 3 feet on each side. The overhang shall be measured relative to the perimeter of the hydraulically-isolated fueling activity area it is to cover.
- **Covers higher than 10 feet** shall have a minimum overhang of 5 feet on each side. The overhang shall be measured relative to the perimeter of the hydraulically-isolated fueling activity area it is to cover.

The requirement to cover the fuel dispensing area can be appealed if the fuel dispensing area is generally used to service oversized equipment (e.g., cranes) that cannot maneuver under a roof or canopy. A request for such an exception shall be submitted as part of the land use permit application.

6.3.3 Pavement

A paved fueling pad of asphalt or concrete shall be placed under and around the fueling activity area and shall meet all applicable building code requirements. Sizing of the paved area shall be adequate to cover the activity area, including placement and number of the vehicles or pieces of equipment to be fueled by each pump. Fuel pumps shall be located a minimum of 7 feet from the edge of the fueling pad.

6.3.4 Drainage

The paved area beneath the cover shall be hydraulically isolated from the surrounding area through grading, berms, or drains. This will prevent uncontaminated stormwater from running onto the area and carrying pollutants into the stormwater system. Drainage from the hydraulically-isolated area shall be directed to an approved sanitary sewer service provider or an authorized pretreatment facility. Surrounding runoff shall be directed away from the hydraulically-isolated fueling pad to a stormwater disposal point that meets all stormwater management requirements of this manual and other applicable code requirements.

6.3.5 Signage

Signage shall be provided at the fuel dispensing area and shall be plainly visible from all fueling activity areas. Detailed signage information is located in **Section 6.2.1**.

6.3.6 Pretreatment - Oil/ water separator

An oil/water separator with coalescing plate shall be installed upstream of the spill control manhole. The purpose of the device is to treat runoff that occurs from washing down and cleaning of the fueling area and to prevent small spills from entering the public sanitary sewer system.

Coalescing plate separators shall be designed to achieve 100-parts per million (ppm) non-polar oil and grease in the effluent from the peak flow generated by the washing

activity. Testing information must be submitted by the manufacturer of the unit that supports the 100-ppm effluent standard at the calculated flow rate.

Separator details must be shown on the building plans submitted at the time of building permit application and shall match manufacturer specifications and details, including the unit flow rate, effluent water quality, and maximum process flow rate.

All separators shall be maintained per the manufacturer's specifications and City-approved maintenance plan.

6.3.7 Spill Control Manholes

A spill control manhole shall be installed on the discharge line of the fueling pad before the public sanitary sewer line tie-in. The tee section shall extend 18 inches below the outlet elevation, and 60 cubic feet of dead storage volume shall be provided below the outlet elevation for storage of oil, grease, and solids. The manhole shall be located on private property.

A shutoff valve is required prior to the connection to the public sanitary sewer system.

6.3.8 Shutoff Valves

Shutoff valves are required to protect sewer systems from spill risks that present a danger for widespread contamination, system damages, or risk to the public health. Shutoff valves shall be located on private property and downstream of the exposed area's collection system. All valves shall be installed and maintained as per manufacturer's recommendations. For more information about shutoff valves and associated valve boxes, contact the local plumbing authority.

Shutoff valves are required for any of the following situations:

A. Site or activity areas are exposed to corrosives or oxidizers that can harm conveyance system components (such as, but not limited to, battery acid).

B. Substances that do not settle or remain in one location and are capable of being dissolved in or float on water (such as, but not limited to, oil and grease). These substances can spread rapidly into downstream conveyance and disposal systems, causing widespread impacts and difficult clean-up situations.

C. Substances that are known to infiltrate through soils and contaminate groundwater.

D. Traffic pathways that surround fueling pads are considered high-use/high-risk areas and will require a valve on the storm drainage system. Valves installed on storm drainage systems shall be installed downstream of all applicable private stormwater quality facilities to accommodate spill containment. These valves shall be left open to facilitate stormwater flows during normal conditions, and immediately closed in the event of a spill.

E. **Fueling pads require a valve downstream of the spill control manhole**. Valves installed on sanitary sewer systems shall be installed before the public sanitary sewer system tie-in. **These valves shall be kept closed**, and opened only to allow incidental drainage activities that do not pose a threat or risk to the disposal point system. The valve shall be closed **immediately** after drainage activities are completed.

6.3.9 Additional Requirements for Fuel Dispensing Facilities

Installation, alterations, or removal of above-ground fuel tanks larger than 55 gallons, and any related equipment, are subject to additional building permit requirements. For technical questions and permitting, contact the local building code authority and the City's Development Review Engineer.

6.3.10 Bulk Fuel Terminals

Bulk fuel terminals, also known as tank farms, require the following:

A. **Secondary containment** equal to 110 percent of the product's largest container or 10 percent of the total volume of product stored, whichever is larger.

B. A **separate containment area** for all valves, pumps, and coupling areas, with sub-bermed areas either in front of or inside the main containment areas. These sub-bermed areas shall have rain shields and be directed to a public sanitary sewer system with a valve to control disposal. If no public sanitary sewer is available, drainage shall be directed to a temporary holding facility for proper disposal and may require a Water Pollution Control Facility (WPCF) permit from the Water Quality Division of ODEQ.

C. An **impervious floor** within all containment areas. Floors shall be sealed to prevent spills from contaminating the groundwater.

D. **Truck loading and off-loading areas**. These areas shall follow cover, pavement, drainage, spill control, and shutoff valve requirements identified for fuel dispensing facilities.

E. **Shutoff valves** installed for the drainage of the tank yard. The valves shall be installed downstream of the drainage system of the primary containment area and kept closed. Valves installed for the drainage of the truck pad and sub-bermed containment areas shall be installed on the sanitary waste line downstream of the spill control manhole.

F. Approval from the appropriate authority is required before draining a containment area. The facility's O&M plan should clearly define which agencies should be contacted for approval in the event of a containment issue arising. This approval will determine appropriate disposal methods, identify pretreatment requirements (if applicable), and approval of the discharge. Pretreatment may be required for oil and grease removal, and testing may be required to establish the specific characteristics of the discharge.

G. Underground fuel tanks less than 4,000 gallons in size are subject to additional permitting requirements by ODEQ. Tanks larger than 4,000 gallons are referred to the USEPA. For technical questions and permitting, call ODEQ's Northwest Region Portland office and ask for the underground storage tank permitting department.

6.4 Above-Ground Storage of Liquid Materials

The requirements in this section apply to all development where there is any exterior storage of liquid chemicals, food products, waste oils, solvents, process wastewaters, or petroleum products in above-ground containers, in quantities of 50 gallons or more. This includes both perma-

nent storage and temporary storage areas. Underground storage tanks or installations requiring a WPCF permit are exempt from these **Section 6.4** requirements but must go through ODEQ's WPCF permit process. Sites with underground storage tanks may still be subject to the material transfer area requirements in **Section 6.7**.

6.4.1 Containment

Liquid materials shall be stored and contained in such a manner that if the container is ruptured, the contents will not discharge, flow, or be washed into a receiving system. A containment device and/or structure for accidental spills shall have enough capacity to capture a minimum of 110 percent of the product's largest container, or 10 percent of the total volume of product stored, whichever is larger.

Double-walled containers are generally exempt from these spill containment requirements.

Quantity thresholds of products that are generally exempt from these spill containment measures are as follows:

- Janitorial and cleaning supplies of less than 100 pounds net weight or 15 gallons net volume. These supplies shall be packaged for consumer use in containers of five gallons or less or have a net weight of less than 30 pounds per container. This does not include cleaners or solvents used for cleaning machinery or motor vehicle and machine parts.
- Office and stationery supplies less than 100 pounds net weight. These supplies shall be packaged for consumer use in containers less than 5 gallons in size or 30 pounds in weight.

6.4.2 Cover

Storage containers (other than tanks) shall be completely covered so rainfall cannot come in contact with them. Runoff shall be directed from the cover to a stormwater disposal point that meets all applicable code requirements.

- **Covers 10 feet high or less** shall have a minimum overhang of 3 feet on each side. The overhang shall be measured relative to the perimeter of the hydraulically-isolated activity area.
- **Covers higher than 10 feet** shall have a minimum overhang of 5 feet on each side. The overhang shall be measured relative to the perimeter of the hydraulically-isolated activity area.

6.4.3 Pavement

A paved storage area is required unless otherwise approved by the City. The storage area shall be paved with asphalt or concrete and shall meet all applicable building code requirements. Sizing of the paved areas shall be adequate to cover the area intended for storage.

6.4.4 Drainage

All paved storage areas shall be hydraulically isolated through grading, berms, or drains to prevent stormwater runoff from flowing into a storage area.

Water will accumulate in uncovered storage areas during and after rain. **Any contaminated water cannot simply be drained from the area.** It must be collected, inspected, and possibly tested at the expense of the property owner before proper disposal can be determined and authorized. Frequent draining may be required during the wet season, which may prove costly. Some type of monitoring may also be needed to determine the characteristics and level of contamination of the stormwater.

All discharges to the sanitary sewer shall be, at a minimum, considered batch discharges and shall require written approval from the appropriate authority and pretreatment prior to discharge. In some cases, an industrial discharge permit may be required. Pretreatment requirements shall be set as part of the discharge approval process, based on the types and quantities of material to be discharged. A discharge evaluation shall be performed before connection to a sanitary sewer or storm sewer. Testing may be required to establish characteristics of the wastewater or contaminated stormwater and to verify that local discharge limits are not exceeded. The facility's O&M plan should clearly define which agencies should be contacted for approval of discharging into any sanitary system.

Significant amounts of precipitation are not expected to accumulate in covered storage areas, and drainage facilities ***are not required*** for the contained area beneath the cover. If the applicant elects to install drainage facilities, the drainage from the hydraulically-isolated area shall be directed to an approved sanitary sewer or authorized pretreatment facility.

6.4.5 Shutoff Valves

A shutoff valve shall be installed in the storage area so excess stormwater can be drained out of the activity area and directed either to the storm drainage facilities (if clean) or into the public sanitary sewer or authorized pretreatment facility (if contaminated). Except when excess stormwater is being discharged, **the valve shall be kept closed at all times** so any spills within the activity area can be contained effectively.

A shutoff valve may be required for a covered storage area if the applicant elects to install drainage facilities to an approved public sanitary sewer connection. The appropriate authority will make this determination based on the type of material stored and the proposed system receiving the discharge.

6.4.6 Signage

Signage shall be provided at the liquid storage area and shall be plainly visible from all surrounding activity areas. Detailed information is located in **Section 6.2.1**.

6.4.7 Additional Requirements

Storage of reactive, ignitable, or flammable liquids shall comply with local, state, and federal fire codes, as applicable. Source controls presented in this section are intended to complement, not conflict with, current fire code requirements.

6.5 Solid Waste Storage Areas, Containers, and Trash Compactors

The requirements in this section apply to all commercial and industrial development with facilities that store solid wastes (both food and non-food). A solid waste storage area is a place where solid waste containers are collectively stored. Solid waste containers include compactors, barrels, dumpsters, and garbage cans. Requirements of this section also apply to activity areas used to collect and store refuse or recyclable materials, such as can or bottle return stations, grease containers, and debris collection areas.

This section applies to multi-family residential sites of three or more units if a shared trash collection area is proposed. However, the requirements of this section do not apply to single-family homes or debris collection areas used for the temporary storage of wood pallets or cardboard.

Refer to OCMC 8.2 for additional requirements related to dumpsters and solid waste storage areas.

6.5.1 Cover

A permanent canopy, roof, or awning may be required to cover the solid waste storage activity area. When a permanent cover is required, it shall be constructed to cover the activity area so rainfall cannot come in contact with the waste materials being stored. The cover shall be sized relative to the perimeter of the hydraulically-isolated activity area it is to cover. Runoff shall be directed from the cover to a stormwater disposal point that meets all applicable code requirements.

All containers shall contain lids whether or not the enclosure contains a permanent canopy, roof, or awning,

Storage areas shall be required to contain a permanent canopy, roof, or awning when the land use is for operations as shown in Table 6-1 and labeled as High Risk or as determined by the City Engineer.

Compactors are exempt from the cover requirement.

6.5.2 Pavement

A paved waste storage area is required when a structural cover or trash compactor is used. The area shall be paved with asphalt or concrete and meet all applicable building code requirements. Sizing of the paved area shall adequately cover the activity area intended for refuse storage, or the trash compactors and associated equipment.

6.5.3 Isolation

Hydraulic isolation shall be provided for the solid waste storage activity area and shall be designed to prevent uncontaminated stormwater runoff from entering the area and carrying pollutants away. Runoff occurring outside the hydraulically-isolated area shall be directed to a stormwater disposal point that meets all applicable code requirements. This can be achieved by reverse grading at the perimeter of an activity area, perimeter curbing or berming, or the use of area drains to collect and divert runoff.

6.5.4 Signage

Signage shall be provided at the solid waste storage area and shall be plainly visible from all surrounding activity areas. Detailed information is located in **Section 6.2.1**.

6.5.5 Drainage

Drainage shall be provided for the hydraulically-isolated solid waste storage area and directed to an approved public *sanitary sewer* or authorized pretreatment facility (storm sewer). A sanitary sewer drain is required for those areas that may be subject to refuse or suspected pollutants that pose a risk if the structural integrity of the trash receptacle is damaged or if its contents are exposed to rainfall.

All storage areas that are required to have a permanent canopy, roof, or awning shall drain to a sanitary sewer.

Non-gravity option. Multi-family solid waste storage areas that do not have gravity sanitary sewer service may be allowed to direct the drainage from the hydraulically-isolated area to the development's stormwater management facility.

Commercial and industrial solid waste storage areas that do not have gravity sanitary sewer service may be allowed to install a pressurized system. With these types of installations, the following items shall be provided at the time of building permit application:

- Verification or evidence that gravity service cannot be obtained.
- Details of an electronic sump pump system equipped with a float switch.
- City approval.

Pressurized system installations are considered to be permanent equipment and deemed the property owner's liability in the event of system failure or if the property becomes vacated.

The local building codes authority will review all sump pump or sewage ejector installations for compliance with local and state plumbing codes. The City Engineer will review for compliance with City standards.

6.6 Exterior Storage of Bulk Materials

The requirements of this section apply to developments that stockpile or store materials in outdoor containers that may erode or have negative stormwater impacts. The materials are separated into three categories based on risk assessments for each material stored: high-risk, low-risk, and exempt. These include but are not limited to the materials listed in **Table 6-1**.

Table 6-1. Material Risk Categories

High-Risk	Low-Risk	Exempt
• Recycling materials with potential effluent • Corrosive materials (e.g., lead-acid batteries) • Storage and processing of food items • Chalk/gypsum products • Feedstock/grain • Material by-products with potential effluent • Fertilizer • Pesticides • Lime/lye/soda ash • Animal/human wastes	• Recycling materials without potential effluent • Scrap or salvage goods • Metal • Sawdust/bark chips • Sand/dirt/soil (including contaminated soil piles) • Material by-products without potential effluent • Unwashed gravel/rock • Compost • Asphalt	• Washed gravel/rock • Finished lumber • Rubber and plastic products (hoses, gaskets, pipe, etc.) • Clean concrete products (blocks, pipe, etc.) • Glass products (new, non-recycled) • Inert products

Materials with any of the following characteristics are exempt from the requirements of this section:

- Have no measurable solubility or mobility in water and no hazardous, toxic, or flammable properties.
- Exist in a gaseous form at ambient temperature.
- Are contained in a manner that prevents contact with stormwater (excluding pesticides and fertilizers).

6.6.1 Cover

A. Low-risk materials shall be covered with a temporary plastic film or sheeting at a minimum.

B. High-risk materials shall be covered permanently with a canopy or roof to prevent stormwater contact and minimize the quantity of rainfall entering the storage area. Runoff shall be directed from the cover to an approved disposal point that meets all applicable code requirements as stated in section 6.5.5.

C. Covers 10 feet high or less shall have a minimum overhang of 3 feet on each side. The overhang shall be measured relative to the perimeter of the hydraulically-isolated activity area.

D. Covers higher than 10 feet shall have a minimum overhang of 5 feet on each side. The overhang shall be measured relative to the perimeter of the hydraulically-isolated activity area.

6.6.2 Pavement

A. Low-risk material storage areas are not required to be paved.

B. High-risk material storage areas shall be paved beneath the structural cover. Sizing of the paved area shall adequately cover the activity area intended for storage.

6.6.3 Drainage

A. Low-risk material storage areas are typically allowed in areas served by standard stormwater management systems. However, all erodible materials being stored must be protected from rainfall.

B. If materials are erodible, a structural containment barrier shall be placed on at least three sides of every stockpile. The barrier shall be tall enough to prevent run-on of uncontaminated stormwater into the storage area and migration of the stored materials as a result of being blown or washed away. If the area under the stockpile is paved, the barrier can be constructed of asphalt berms, concrete curbing, or retaining walls. If the area under the stockpile is unpaved, sunken retaining walls or ecology blocks can be used. The applicant shall clearly identify the method of containment on the building plans.

C. For high-risk material storage areas, the paved area beneath the structural cover shall be hydraulically isolated through grading, structural containment berms or walls, or perimeter drains to prevent uncontaminated stormwater from running onto the area and carrying pollutants away. If significant amounts of precipitation are not expected to accumulate in covered storage areas, drainage facilities are not required for the contained area beneath the cover. If the applicant elects to install drainage facilities, the drainage from the hydraulically-isolated area shall be directed to an approved public sanitary sewer or authorized pretreatment facility. In such a case, an evaluation will be done to determine if an NPDES discharge permit is required.

6.6.4 Signage

Signage shall be provided at the storage area if hazardous materials or other materials of concern are stored. Signage shall be located so it is plainly visible from all storage activity areas. More than one sign may be needed to accommodate large storage areas. Detailed information and examples are provided in **Section 6.2.1**.

6.6.5 Shutoff Valves

A shutoff valve may be required for the structurally covered storage area if the applicant elects to install drainage facilities to an approved public sanitary sewer. The City will make this determination based on the type of material stored and the proposed system receiving the discharge.

6.6.6 Monitoring and Sampling

A sampling manhole or other suitable stormwater monitoring access point may be required to monitor stormwater runoff from the storage area. This may apply to certain types of storage activities and materials or if an alternative source control is proposed. The City will review the applicability of this requirement.

6.6.7 Additional Requirements

Storage of pesticides and fertilizers may need to comply with specific regulations outlined by ODEQ. For answers to technical questions, call ODEQ's Northwest Region Portland office.

6.7 Material Transfer Areas/Loading Docks

The requirements in this section apply to all developments that propose the installation of new material transfer areas, or structural alterations to existing material transfer areas (e.g., access ramp regrading, leveler installations).

The requirements apply to all material transfer areas, including loading/unloading docks, bay doors, and any other building access points with the following characteristics:

- The area is designed (size, width, etc.) to accommodate a truck or trailer being backed up to or into it, and
- The area is expected to be used specifically to receive or distribute materials to and from trucks or trailers.

The requirements may not apply to areas that are used only for small- to mid-sized passenger vehicles and that are restricted (by lease agreements or other regulatory requirements) to storing, transporting, or using materials that are classified as domestic use. Examples of domestic uses include primary educational facilities (elementary, middle, or high schools), buildings used for temporary storage (a lease agreement will need to be provided), and churches. Contact the City for help in determining whether requirements apply.

6.7.1 Pavement

A paved material transfer area of asphalt or concrete shall be placed underneath and around the loading and unloading activity area and shall meet all applicable building code requirements. This will reduce the potential for soil contamination with potential impacts on groundwater and will help control any acute or chronic release of materials present in these areas.

6.7.2 Isolation

For loading docks, the first 3 feet of the paved area, measured from the building or dock face, shall be hydraulically isolated through grading, berms, or drains to prevent uncontaminated stormwater from running onto the area and carrying pollutants away.

Bay doors and other interior transfer areas shall be designed so that stormwater runoff does not enter the building. This can be accomplished by grading or drains.

6.7.3 Drainage

Drainage from the hydraulically-isolated loading dock areas shall be directed to an approved public sanitary sewer or authorized pretreatment facility. Surrounding runoff and drainage from the access ramp shall be directed away from the hydraulically-isolated area to the appropriate stormwater management facility.

Non-Gravity Option. Activity areas that cannot achieve gravity sanitary sewer service may be allowed to install a pressurized system. With these types of installations, the following items shall be provided at the time of building permit application:

- Verification or evidence that gravity service cannot be obtained.
- Details of an electronic sump pump system equipped with a float switch.
- City approval.

Pressurized system installations are considered to be permanent equipment and deemed the property owner's liability in the event of system failure or if the property becomes vacated.

The local building codes authority will review all sump pump or sewage ejector installations for compliance with local and state plumbing codes. The City Engineer will review for compliance with City standards.

Bay Doors and Other Interior Transfer Areas. Because interior material transfer areas are not expected to accumulate precipitation, installation of floor drains is not required or recommended. It is preferable to handle these areas with a dry mop or absorbent material. If interior floor drains are installed, they shall be plumbed to an approved public sanitary sewer or authorized pretreatment facility.

6.7.4 Signage

Signage shall be provided at the material transfer area and shall be plainly visible from all surrounding activity areas. Detailed information is located in **Section 6.2.1**.

6.7.5 Shutoff Valves

Shutoff valves are required to protect the public sanitary sewer and drainageway systems from spills of chemicals and other constituents that may provide a danger of widespread contamination, system damage, or risk to public health.

Shutoff valves are required for any of the following situations:

- Site activity areas that are exposed to corrosives or oxidizers that can harm conveyance system components (such as battery acid).
- Transfer of substances (such as oil and grease) that do not settle or remain in one location and are capable of being dissolved in or float on top of water. These substances can spread rapidly into downstream systems, causing widespread impacts and difficult clean-up situations.
- Transfer of substances that are known to infiltrate through soils and contaminate groundwater.

Valves located in material transfer areas are typically left open to facilitate drainage during normal conditions, and immediately closed in the event of a spill.

Prior to transfer activities of harmful substances, the valves shall be closed and reopened only after the transfer is complete. The shutoff valves must be located on private property and downstream of the exposed area's collection system.

All valves shall be installed and maintained in accordance with manufacturer's specifications. For more information about shutoff valves and associated valve boxes, contact the local building codes authority.

6.7.6 Additional Requirements

Bay doors and other interior transfer areas shall provide a 10-foot no obstruction zone beyond the entrance within the building. This will allow the transfer of materials to occur with the truck or trailer end placed at least 5 feet inside the building, with an additional staging area of 5 feet beyond that. The no obstruction zone shall be clearly identified on the stormwater management plan at the time of the building permit application and shall be painted at the facility with bright or fluorescent floor paint.

6.8 Equipment and/or Vehicle Washing Facilities

The requirements in this section apply to all development with a designated equipment and/or vehicle washing or steam cleaning area. This includes smaller activity areas, such as wheel-washing stations. **Single Family Residential sites are exempt.**

6.8.1 Cover

The washing area shall be covered with a permanent canopy or roof so precipitation cannot come in contact with the washing activity area. Precipitation shall be directed from the cover to a stormwater disposal point that meets all applicable code requirements.

- **Covers 10 feet high or less** shall have a minimum overhang of 3 feet on each side. The overhang shall be measured relative to the perimeter of the hydraulically-isolated washing activity area it is to cover.
- **Covers higher than 10 feet** shall have a minimum overhang of 5 feet on each side. The overhang shall be measured relative to the perimeter of the hydraulically-isolated washing activity area it is to cover.

6.8.2 Pavement

A paved wash pad of asphalt or concrete shall be placed under and around the washing activity area and shall meet all applicable building code requirements. The paved area shall be sized to cover the activity area adequately, including the placement of the vehicle or piece of equipment to be cleaned.

6.8.3 Signage

Signage shall be provided at the washing area and shall be plainly visible from all surrounding activity areas. Detailed information is located in **Section 6.2.1**.

6.8.4 Drainage

The paved area beneath the cover shall be hydraulically isolated through grading, berms, or drains to prevent uncontaminated stormwater from running onto the area and carrying pollutants away. Drainage from the hydraulically-isolated area shall be directed to an approved public sanitary sewer or authorized pretreatment facility. If connected to the public sanitary sewer, and, depending on the washing compounds used

(i.e., brighteners), an industrial discharge permit to the public sanitary sewer system may be required. For further questions, contact the City.

Surrounding runoff shall be directed away from the hydraulically-isolated washing pad to a stormwater disposal point that meets all applicable requirements of this manual.

6.8.5 Oil Controls

All vehicle and equipment washing activities will be equipped with an approved oil/water separator system unless otherwise authorized by the City. The system shall comply with the public sanitary sewer discharge limits. The following design criteria are established for oil/water separators discharging to a public sanitary sewer system. For discharge requirements and limitations to the public sanitary sewer system, contact the City.

Onsite wash recycling systems may be used for oil control as long as they can meet effluent discharge limits for the public sanitary sewer system. A detail of the wash recycling system and vendor specifications identifying effluent efficiencies shall be submitted as part of the building plans at the time of stormwater management plan/building permit application.

Washing areas protected with a cover or located inside a structure shall have an oil/water separator that meets the following requirements:

A. Baffled oil/water separators and spill control separators shall not be allowed for use with equipment and/or vehicle washing applications. Activities and processes of a washing facility change over time, and the introduction of heat and surfactants may occur.

B. Coalescing plate separators shall be designed to achieve 100-ppm non-polar oil and grease in the effluent from the peak flow generated by the washing activity. Testing information must be submitted by the manufacturer of the unit that supports the 100-ppm effluent standard at the calculated flow rate.

C. Any pumping devices shall be installed downstream of the separator to prevent oil emulsification.

D. Separator details must be shown on the building plans submitted at the time of building permit application and shall match manufacturer specifications and details, including the unit flow rate, effluent water quality, and maximum process flow rate.

E. All separators shall be maintained per the manufacturer's specifications and City-approved maintenance plan.

6.9 Land with Suspected or Known Contamination

The requirements in this section apply to all development projects that disturb property at risk, suspected, or known to contain pollutants in the soil or groundwater. This includes development that is surrounded by properties found to have trace pollutants. These requirements will be applied to any property that is seeking to make a new connection to a public storm system from a property that is at risk, suspected, or known to contain pollutants in the soil or groundwater. To avoid confusion with references to water quality pollutants throughout this manual, this section refers to pollutants as **contaminants and/or contamination**.

Because of local, state, and federal regulations, special handling and management of site soils, groundwater, and surface drainage may be necessary. As a result of these regulations, sites with suspected or known contamination require a more detailed review process and may delay issuance of related stormwater management plans and building permit approvals. Applicants are advised to contact the City early on in the design process (before plan submittal) if they are aware or suspect the site has contaminants or is adjacent to a contaminated site.

6.9.1 Identifying Contaminated Sites

To research contaminant information, refer to ODEQ's Environmental Cleanup Site Information online database: http://www.deq.state.or.us/lq/ecsi/ecsi.htm.

If records indicate there is a potential of contamination on the site, the applicant must contact ODEQ prior to pre- and post-construction activities to ensure conditions of record are not violated. For technical questions related to site contamination and clean-up, contact the Land Quality Division of ODEQ and/or ODEQ's Northwest Region Portland Office.

If a Phase 1 ODEQ Site Assessment is required, the report shall be submitted to the City for review.

If contamination is discovered subsequent to stormwater management plan approval, the owner shall take steps immediately to protect health and safety and contact the City and ODEQ. Plan approval is suspended until the contamination is resolved.

6.9.2 Review Process

Stormwater discharges from sites suspected of contamination, whether proposed as a temporary construction connection or as a permanent connection to any public storm or sanitary sewer system, will require a special authorization from the City. Contaminants, media, and site conditions are unique to each parcel of land. Sites at risk for contamination shall therefore be reviewed on a case-by-case basis.

After reviewing the proposal and a characterization of the contaminants from the site, the City may make one of the following decisions:

- **Approve discharges to the public storm and/or sanitary sewer system with restrictions** such as those described herein or as is necessary given the nature of the discharge.
- **Require the applicant to obtain an NPDES permit** from ODEQ for the anticipated discharge prior to connection to a public system.
- **Require that the applicant become part of the Industrial Pre-Treatment Program** operated by the applicable wastewater agency.
- **Deny the request to discharge** to the public storm and/or sanitary sewer system.
- **Allow unrestricted connection** to the public storm and/or sanitary sewer system, with a testing point for future monitoring.

6.9.3 Soil Management

Stockpiles of contaminated soils shall be covered with temporary plastic film or sheeting to prevent stormwater from coming into contact with them.

Stockpile perimeters shall have a containment barrier on all four sides of every stockpile to prevent stormwater run-on and material runoff. Barriers can consist of concrete curbing, silt fencing, or other berming material, depending on the activity, size, and resources available.

Areas under stockpiles of contaminated soils are not required to be paved. However, an impervious layer shall be placed beneath the stockpile to protect uncontaminated areas from potential leachate.

6.9.4 Construction Dewatering

All construction dewatering discharges resulting from groundwater or precipitation (rainfall) will be evaluated for contamination before disposal methods can be approved.

Source controls, sampling points (if required), and the disposal point shall be identified on the erosion prevention and sediment control plan (see **Chapter 7**). Source control requirements will be identified as part of the review process of the laboratory analysis reports and the proposed stormwater management plan. Based on the intended method of disposal, the following requirements apply:

- **If onsite infiltration is the proposed method for disposal**, authorizations are required from the City and the Land Quality Division of ODEQ. Private infiltration systems for construction dewatering shall be located and maintained on private property, outside the public rights-of-way (ROWs).
- **If a public sanitary system is the proposed method of disposal**, authorizations are required from the appropriate authorities, and will be allowed only if extensive pretreatment is implemented and the discharge is approved by the appropriate authorities. All groundwater and surface water discharges to a sanitary sewer system shall meet local discharge limits and will be subject to discharge volume charges.
- **If a public stormwater system is the proposed method of disposal**, evaluations of discharge to the public storm system will be based on whether discharges meet, or can be pretreated to meet, requirements of the City, NPDES discharge permit, or other state and federal regulations for the receiving surface water.
- **If a receiving stream is the proposed method for disposal**, authorizations are required from the City and Land Quality and Water Quality Divisions of ODEQ.

6.9.5 Post-Construction Drainage Systems

All discharges from sites with suspected or known contamination shall identify an appropriate stormwater disposal location and obtain discharge permits from the appropriate agencies.

If **onsite infiltration** is the proposed method for disposal, authorizations are required from the City and ODEQ. Private infiltration systems shall be located and maintained on private property, outside the public ROWs.

If **a drainageway** is the proposed method for disposal, authorizations are required from the City, the U.S. Army Corp of Engineers, and ODEQ.

If **an offsite public storm or sanitary sewer system** is the proposed method for disposal, authorization or industrial discharge permitting may be required from the City. A per-

manent monitoring point may be required to ensure compliance with local discharge regulations. If monitoring is necessary, a permanent structure (such as a sampling manhole or flow-through vault) shall be installed on the discharge line of the subsurface drainage system.

6.10 Covered Vehicle Parking Areas for Commercial or Industrial Uses

The requirements in this section apply to commercial or industrial development with a covered vehicle parking area. Existing parking structures are not required to be retrofitted unless the structure is being redeveloped.

Single-level covers (canopies, overhangs, and carports) are exempt from the requirements of this section but may be subject to the requirements of **Section 6.11** if they are located in high-traffic areas.

6.10.1 Drainage

Stormwater runoff from the top floor of a multi-level parking structure shall be directed to a stormwater disposal point that meets all water quality requirements of these standards and any other applicable code requirements.

Significant amounts of precipitation are not expected to accumulate in the lower floors of multi-level parking structures, so drainage facilities ***are not required*** for the lower floors. If the applicant elects to install drainage facilities, the drainage from the lower floors shall be directed to an approved public sanitary sewer system. Prior to discharge all applicable pretreatment requirements shall be met.

The adjacent uncovered portions of the site shall be designed so that stormwater does not enter the covered parking areas. This can be accomplished through grading or drains.

6.11 Industrial and Commercial High Traffic Areas

The requirements in this section apply to all new development with vehicle parking areas for developments zoned industrial or commercial with high-traffic volumes. High-traffic volumes are defined as an average daily traffic (ADT) of 2,500 vehicles, consistent with ODEQ's Industrial Stormwater Best Management Practices Manual (February 2013).

Industrial and commercial high-traffic areas with a drainage area of over 10,000 SF directed to a single stormwater management facility shall have an adequate oil control facility located upstream of the stormwater management facility. Parking areas of over 10,000 SF that are divided into drainage areas of less than 10,000 SF do not require this pretreatment.

6.11.1 Oil Controls

An oil/water separator with coalescing plate shall be installed upstream of the stormwater management facility. The purpose of the device is to treat and prevent hydrocarbons from entering the stormwater BMP facility. This device shall be maintained per the manufacturer's specification and the approved maintenance plan.

Coalescing plate separators shall be designed to achieve 100-ppm non-polar oil and grease in the effluent from the peak flow generated by the expected site activity. Test-

ing information must be submitted by the manufacturer of the unit that supports the 100-ppm effluent standard at the calculated flow rate.

Flow rates will be determined by the drainage area served by the device. The device will be sized to treat the water quality storm event as specified in **Chapter 4**.

Separator details must be shown on the building plans submitted at the time of building permit application and shall match manufacturer's specifications and details, including the unit flow rate, effluent water quality, and maximum process flow rate.

All separators shall be maintained per the manufacturer's specifications and the approved O&M plan.

Stormwater and Grading Design Standards

CHAPTER 7

Erosion Prevention and Sediment Control

CHAPTER 7. EROSION PREVENTION AND SEDIMENT CONTROL

When land is disturbed, the erosion rate accelerates dramatically. Since ground cover on an undisturbed site protects the surface, removal of that cover increases the site's susceptibility to erosion. The major problem associated with erosion is the movement of soil off the site and its impact on water quality. This chapter outlines the requirements for erosion prevention, sediment control, and construction debris management.

7.1 Introduction

Sediment in streams is a contributing factor in the decline of salmonid populations in our region. Many agencies, including the Oregon Department of Environmental Quality (ODEQ), National Marine Fisheries Service (NMFS), and the Oregon Department of Fish and Wildlife (ODFW) require proper erosion controls to protect natural systems. In addition, sediment leaving the site may damage neighboring properties, block drainage systems, and enter roadways. Proper planning and use of erosion prevention measures can reduce these impacts.

Erosion prevention measures are more effective than the reactive control of sediment. Identifying erosion problems at the planning stage and noting highly erodible areas helps in selecting cost effective, environmentally sensitive erosion control measures. Once soil particles become dislodged, it requires greater efforts and costs to contain the sediment on the site.

It is the City's goal to comply with all conditions of the various state and federal regulations and requirements that pertain to erosion and water quality protection. As required by water quality standards set forth in Oregon Administrative Rules, It is the City's policy to prevent erosion and use sediment controls to minimize the amount of sediment and other pollutants that reach the public storm and/or surface water system resulting from development, construction, grading, filling, excavating, clearing, and any other activity which accelerates erosion.

For erosion prevention design specifications and standards, the City has partnered with other regional jurisdictions to develop a manual for erosion prevention and sediment control. The City has adopted that manual as the **City of Oregon City Public Works Erosion and Sediment Control Standards (Erosion Standards)**. The requirements of this chapter are consistent with and should be used in conjunction with the **Erosion Standards.** The **Erosion Standards** and other associated documents and forms can be obtained from the City.

7.2 General Provisions

A. The owner of the property and/or permittee under an approved development activity shall be held responsible for any violation of these standards.

B. Visible or measurable erosion from a project site which enters, or is likely to enter, the public or private storm and surface water system or other properties, is prohibited, and is a violation of these standards.

C. No person shall create physical erosion by dragging, dropping, tracking, or otherwise placing or depositing, or permitting to be deposited, mud, dirt, rock or other such debris upon a public street or into any part of the public storm and surface water system, or any part of a private storm and surface water system which drains or connects to the public storm and

surface water system. Any such deposit of material shall be removed immediately using hand labor or mechanical means. No material shall be washed or flushed into any part of the storm and surface water system until all mechanical means to remove the debris have been exhausted and preventative sediment filtration is in place.

D. The City requires temporary and permanent measures for all construction projects to lessen the adverse effects of site alteration on the environment. The owner or his/her agent, contractor, or employee, shall properly install, operate, and maintain both temporary and permanent measures to protect the environment during the useful life of the project.

E. Approval of an **Erosion and Sediment Control Plan (ESCP)** plan by the permitting authority does not relieve the applicant's responsibility to ensure that ESCP measures are constructed and maintained on the construction site.

F. Nothing in this section shall relieve any person of the obligation to comply with the regulations or permits of any local, state, or federal authority.

G. These erosion prevention and sediment control rules apply to all properties within the city boundary, regardless of whether that property is involved in a construction or development activity.

7.3 Applicability

Within the boundaries of the city, any grading or soil disturbance associated with a development activity that disturbs 1,000 square feet or greater is required to obtain an erosion and sediment control (ESC) permit from the City. This requirement is consistent with Metro's Urban Growth Management Plan, Title 3 and the City's National Pollutant Discharge Elimination System (NPDES) Municipal Separate Storm Sewer System (MS4) permit.

If any development activity that did not require an ESC permit causes a violation of these standards, the permittee or property owner shall be required to obtain an ESC permit and comply with the associated rules and regulations, including the development of an ESCP, payment of permit fees, and construction site inspection activities.

7.3.1 NPDES 1200-C Permit

In addition to obtaining an ESC permit from the City, development activity that results in 1 or more acres of disturbance is required to obtain an NPDES 1200-C permit from ODEQ and conform to ODEQ's NPDES 1200-C permit requirements. The planning process outlined in the **Erosion Standards** is intended to assist the applicant in meeting the requirements of the NPDES 1200-C permit. However, it is the responsibility of the applicant to review and comply with ODEQ's regulations and permitting process, including paying any applicable fees to reviewing agencies.

7.4 Erosion and Sediment Control Plan (ESCP)

The purpose of the ESCP is to clearly establish control measures that are intended to prevent erosion and off site sediment transport during construction.

7.4.1 General ESCP Principles

When developing an ESCP, the following are important concepts to consider:

A. **Minimize site disturbance**. Plan and locate development activities to minimize land disturbance such as clearing and grading and cut and fill to protect existing vegetation as well as reduce erosion and sediment loss.

B. **Stage construction activities**. Where applicable and appropriate, locate construction pollutant sources (including sediment) away from drainage swales, wetlands, and water bodies.

C. **Schedule work.** Schedule work to minimize overall impacts, addressing critical areas during the dry weather season when practicable. Phase construction activities to minimize the exposed soil area and the duration of exposure.

D. **Prevent erosion.** Emphasize the use of erosion prevention techniques, including proper site planning and construction phasing, ahead of sediment control measures.

E. **Minimize length and steepness of slopes.** Cut and fill slopes should be as flat as practicable and consistent with soil stability. Slopes of two-horizontal to one-vertical (2h:1v) or steeper may require special design.

F. **Control sediment transport.** Sediment removed from sediment control facilities should be placed in non-critical flat areas of the site. In no instances shall the removed sediment be placed in a position that would allow subsequent rainfall to return it to the sediment control devices.

G. **Address wet weather conditions.** Stockpile erosion prevention materials and supplies onsite during the wet weather period (October 1 through May 31). Enhance protections prior to predicted storm events.

H. **Prevent impacts from construction site wastes**. Consider and prevent exposure to stormwater runoff from construction site wastes such as discarded building material, concrete truck washout, chemicals, litter and sanitary waste.

I. **Adjust during construction.** The ESCP shall identify the minimum best management practices (BMPs) to address expected site conditions. Throughout the project duration, it is the responsibility of the applicant to identify appropriate BMPs to prevent erosion and control sediment discharges. In some cases, this will require the applicant to adjust, modify, or add additional BMPs beyond those listed in the ESPC.

J. **Maintain BMPs.** Inspect and maintain ESC BMPs throughout the construction period.

K. **Site stabilization.** Seed and mulch exposed areas as soon as possible after grading is completed. Stabilize the site following construction.

7.4.2 Approved BMPs

ESC BMPs are required for construction areas where ground surfaces will be disturbed by clearing, grading, fills, excavations, and other construction activities. The ESCP shall incorporate construction BMPs which minimize the amount of disturbed land area and avoid or minimize work on steep slopes.

The BMPs prescribed in the **Erosion Standards** are the approved BMPs that shall be used to develop the ESCP. Use of other BMPs shall require approval from the City.

7.4.3 Wet Weather Measures

On sites where vegetation and ground cover are removed, vegetative ground cover shall be planted and established by October 1 and continue to function through May 31 of the following year, or as approved by the City. If ground cover is not established by October 1, the open areas shall be protected through May 31 of the following year with straw mulch, erosion blankets, or other methods approved by the City.

7.4.4 Maintenance and Removal of BMPs

The permittee shall inspect (see **Section 7.5.3**) and maintain the facilities according to the approved ESCP during the construction phase, the post construction phase, establishment of permanent vegetation, or any other permitted activity. If the facilities and techniques approved in an ESCP are not effective or sufficient as determined by the City, the permittee shall submit a revised plan within 3 working days of written notification by the City. Upon approval of the revised plan by the City, the permittee shall implement the additional facilities and techniques included in the revised plan immediately. In cases where erosion is likely to occur, the City may require the applicant to install interim control measures prior to submittal of the revised ESCP.

Temporary BMPs, such as sediment fences, shall be removed after permanent vegetation is established.

Sediment control BMPs will accumulate sediment during the construction process. The applicant shall remove and properly dispose of accumulated sediment in accordance with the **Erosion Standards**.

7.4.5 Contaminated Soils

If the construction process reveals soils contaminated with hazardous materials or chemicals, the contractor shall stop work immediately, ensure that no contaminated material is improperly hauled from the site, and immediately notify the City, ODEQ, and other applicable agencies.

7.5 Plan Review, Permitting and Approval Processes

The City reviews and approves many types of development activities such as single-family residential, multi-family, commercial, industrial, partitions, and subdivisions. All development activity, regardless of the nature of development activity, is subject to the ESC permitting process. Activities that exceed the thresholds outlined earlier will require additional permitting requirements.

7.5.1 ESC Permitting Process

For single-family development permit applications, the applicant shall apply for the erosion control permit along with the building permit application. For non single-family development permit applications, the applicant shall apply for the ESC permit and any other public works permits, in conjunction with the land use application.

7.5.2 ESCP Submittal Requirements

The applicant shall submit an ESCP incorporating the appropriate BMPs for the anticipated site conditions.

The ESCP shall include written documentation and construction plans that show the locations of proposed minimum measures. The ESCP shall be included as part of the overall submittal of the stormwater management plan. For specific guidelines, see the **Erosion Manual**. ODEQ's NPDES 1200-C permit templates may be used for developing the ESCP.

7.5.3 Inspection Process

Inspections shall be conducted by the applicant and/or site operator according to the requirements in the **Erosion Standards**. ESC inspections include:

- Pre-construction: Initial site inspection with City representatives prior to starting any development, site ground disturbance or grading activity excluding the installation of the ESCP BMPs.
- Active Period: Daily site inspections during active construction when stormwater runoff, including snowmelt, is occurring.
- Prior to Inactivity: Inspection to ensure that ESCP measures are in working order. Any necessary repairs must be made prior to leaving the site.
- Inactive Periods (greater than 7 calendar days): Inspections once every two weeks.

During periods when the site is inaccessible due to inclement weather, inspections shall occur daily at relevant and accessible downstream discharge points to look for evidence of sediment laden water flowing from the construction site.

Routine inspections shall be conducted by the City throughout construction.

Once the project has been completed, the permittee shall request a final ESC inspection. Prior to a certificate of occupancy being issued, the City inspector must confirm that the ESC permit can be closed.

Stormwater and Grading Design Standards

CHAPTER 8

Operation and Maintenance

CHAPTER 8. OPERATION AND MAINTENANCE

One purpose of the City of Oregon City's (City) operation and maintenance (O&M) program is to manage stormwater runoff from new development and redevelopment within the boundaries of the city and as required in the City's National Pollutant Discharge Elimination System (NPDES) Municipal Separate Storm Sewer System (MS4) permit. The program is required to provide a mechanism to ensure long-term functionality of constructed stormwater management facilities.

8.1 Introduction

The O&M requirements in this chapter apply to all stormwater management facilities constructed as a requirement of these standards. Maintenance activities, including routine maintenance, restorative maintenance, and rehabilitation are required to ensure the long-term function and effectiveness of stormwater management facilities and infrastructure. Initial site planning must incorporate provisions for adequate access and space to perform maintenance activities for all stormwater management facilities.

8.2 General Requirements

The City is responsible for ensuring the O&M of stormwater management facilities within the city boundary. All facility designs will be held to the same standards regardless of the organization or entity that has accepted responsibility for the maintenance. There are two categories of maintenance for stormwater management facilities.

- ***Privately-owned and maintained***. These are stormwater management facilities which benefit one owner. They include residential, multi-family, commercial, and industrial types of developments. These stormwater management facilities require a maintenance covenant recorded with the title that describes the types of facilities and necessary maintenance.
- ***Publicly-owned and maintained***. These are regional and sub-regional stormwater management facilities which benefit the public in general and any facility located within the public right-of-way. These stormwater management facilities can be utilized for any type of development if shown to have sufficient capacity. Stormwater management facilities that serve multiple properties (e.g., facilities for residential subdivisions) shall be transferred to public ownership following the 2-year maintenance warranty period.

8.3 O&M Plans

All stormwater management facilities require the applicant to execute and record an O&M plan. The plan shall ensure that owners maintain and operate the stormwater management facility to preserve and continue its function. O&M plans require stormwater management facility owners to properly maintain, repair, modify or reconstruct (if necessary) the facility, and provide a schedule for the maintenance frequency for the facility.

8.3.1 O&M Plan Development

O&M plans shall be required for all permanent stormwater best management practices (BMP) facilities to ensure that they function as designed. The purpose of an O&M plan is to provide guidance to those who are responsible for the long-term inspection and maintenance of the facility.

To ensure functionality of the stormwater BMP facilities, owners are required to inspect facilities regularly per the approved O&M plan to determine maintenance needs. Routine inspection and maintenance can help to keep overall maintenance costs low by detecting problems early and avoiding large repair or replacement costs.

The facility design and maintenance specifications in **Appendix C** can be used to create the O&M plan. If the proposed facility types do not match a stormwater management facility in **Appendix C**, the applicant and design engineer will be responsible for creating any drawings, maintenance specifications, and an inspection checklist to be incorporated into the O&M plan.

O&M plans for privately owned/maintained facilities shall be recorded with the Clackamas County Clerk's office as an exhibit to the maintenance covenant referenced in **Section 8.4.1** before issuance of a building permit or final plat approval.

8.3.2 O&M Plan Elements

The following outline can be used to prepare an O&M plan.

1. Introduction and general information
   a. Facility Information. Facility type and identifying name or number, as applicable.
   b. Contact. Name and contact information for the responsible organization or individual.
   c. Narrative. Written overview describing the site, drainage areas, and intended function of the facility.
2. Operations and Maintenance
   a. Operating Procedures. Normal operating procedures for facility function, including any seasonal modifications or adjustments.
   b. Regular Maintenance. Required maintenance activities and schedule (i.e., landscape maintenance, sediment removal, pipe cleaning).
   c. Inspections. Required inspection frequency to verify facilities are being maintained and functioning as designed.
   d. Maintenance Standards. Minimum standards that are required for the stormwater management facility to produce desired results and maintenance actions when the minimum standards are not met (See **Appendix C**).
   e. Lifespan. Expected lifespan of the facility components (i.e., when should owners expect to replace growing media, plantings, and control structure elements?).
   f. Connected Facilities. List of interrelated or connected stormwater management facilities and description of how each facility works with the next one.
3. O&M Plan Responsibility
   a. Responsible Party. Identify the person(s) or organization(s) responsible for inspections of stormwater management facilities.
   b. Funding. Identify the funding source for maintenance.

4. Attachments
   a. Site Plan. Include a site plan to identify the location of the facility/facilities, sources of runoff entering each facility, and ultimate stormwater disposal point.
   b. Facility Details. Include the stormwater management facility detail sheet(s) and O&M Plan and checklist(s) (when applicable use details in **Appendix C** for reference).
   c. Maintenance Agreement or Covenant. Include a copy of the public maintenance agreement and/or private maintenance covenant that will be used to assign maintenance responsibility and/or to allow access for maintenance or inspection of the stormwater management facilities.

8.3.3 O&M Plan Review and Approval Process

The O&M plan and associated agreements, covenants, and easements will be reviewed as part of the City's overall stormwater management plan review and approval process.

8.4 Privately-Owned and Maintained Facilities

Generally, stormwater BMP facilities that benefit single owners shall be privately-owned and maintained. All stormwater management facilities to be maintained privately require an O&M plan that is reviewed and approved as part of the overall stormwater management plan review process.

8.4.1 Maintenance Covenant for Private Stormwater Facilities

Maintenance of all privately-owned stormwater management facilities shall be ensured through the creation of a formal maintenance covenant that must be approved by the City and recorded into the land record prior to final plan and/or plat approval. A Maintenance Covenant Template is provided in **Appendix F**. The O&M plan, including scheduled inspections and regular maintenance activities, shall be referenced in the maintenance covenant.

8.4.2 Access Easement

Prior to the issuance of any permit that includes a stormwater management facility, the applicant or owner of the site must execute a maintenance covenant that includes access rights for the City, or its contractor or agent, to inspect the facility and ensure that it is maintained in proper working condition. This includes the right to enter a property when the City has a reasonable basis to believe that a violation of City standards and/or rules and regulations is occurring or has occurred, and to enter when necessary for abatement of a public nuisance or correction of a City violation. The access easement shall be included in the maintenance covenant, as approved by the City and recorded at the Clackamas County Clerk's office.

8.4.3 Annual Inspection and Maintenance

Annual inspections are to be conducted by the Responsible Party identified within the O&M Plan and may be reviewed by the City upon request. All stormwater management facilities must undergo an annual inspection to document maintenance and repair needs and ensure compliance with the requirements of these standards. Maintenance

needs may include the following: removal of silt, litter and other debris from all catch basins, inlets and drainage pipes; grass cutting and vegetation removal; and necessary replacement of water quality vegetation. Any maintenance needs identified must be addressed by the Responsible Party in a timely manner. The inspection and maintenance frequency may be increased as deemed necessary to ensure proper functioning of the stormwater management facility.

8.4.4 Records of Maintenance Activity

Facility owners shall keep records of all maintenance and repairs and shall retain the records for at least 3 years. These records shall be made available to the City during inspection of the facility and at other reasonable times upon request. The owner shall submit a copy of the stormwater management facility maintenance and inspection records to the City annually as required.

8.4.5 City Inspection of Stormwater Management Facilities

Inspections may be conducted by the City at any time, including but not limited to, routine inspections, random inspections, inspections based on complaints or other notice of possible violations, inspections related to the City's NPDES stormwater permit, and joint inspections with other agencies done under environmental or safety laws. Inspections may include, but are not limited to, review of maintenance and repair records; sampling discharges, surface water, groundwater, or material/water in stormwater management facilities; and facility condition evaluations.

8.4.6 Failure to Comply with the O&M Plan

In the event that the stormwater management facility becomes a danger to public safety or public health, the City shall notify in writing the party responsible for maintenance of the stormwater management facility. Upon receipt of the written notice, the responsible person shall have 7 days (in accordance with the maintenance covenant) to effect maintenance and repair of the facility in an approved manner. If a responsible party fails or refuses to meet the requirements of the maintenance covenant, the City, after reasonable notice, may correct a violation of the design standards or maintenance needs by performing all necessary work to return the facility to proper working condition. After proper notice, the City shall assess the owner of the facility for the cost of repair work and any penalties.

8.4.7 Modifications to the O&M Plan

If it is determined that the O&M plan requires modification to maintain the functionality of the facility, then modifications to the O&M plan shall be submitted to the City for review and approval. Written approval from the City is required prior to modifying the O&M plan. The approved modified plan shall be recorded at the Clackamas County Clerk's Office.

8.5 Publicly-Owned and Maintained Facilities

Generally, publicly-owned and maintained stormwater management facilities are facilities that serve multiple property owners or the general public. Publicly-owned stormwater management facilities can serve any type of development (residential, multi-family, commercial, industrial). Publicly-owned facilities may be constructed by the City, or they may be constructed as part of a private development's stormwater management plan, with maintenance responsibilities transferred to the City following the 2-year maintenance warranty period.

8.5.1 O&M Plan

All stormwater management facilities to be maintained by the City require an O&M plan that is reviewed and approved as part of the overall stormwater management plan review process. The O&M plan is prepared by the applicant, identifying the City as the responsible party for inspection and maintenance following the 2-year warranty period (see **Chapter 9**).

During the 2-year warranty period, the applicant is responsible for all maintenance and documentation requirements outlined within the O&M plan. Prior to the completion of the warranty period, the City will require all maintenance records and documents be reviewed and deficiencies addressed prior to the transfer of maintenance responsibilities.

The applicant shall enter into a maintenance agreement with the City establishing bonding, surety, or payment for maintenance of the facility during the 2-year warranty period.

8.5.2 Modifications to the O&M Plan

Following the 2-year warranty period, at the City's discretion, the applicant may be required to prepare a modified O&M plan for public stormwater management facilities. If it is determined that the O&M plan requires modification to maintain the functionality of the facility, then modifications to the O&M plan shall be submitted to the City for review and approval prior to the release of the warranty surety.

8.5.3 Maintenance Fees

The City may establish maintenance fees for publicly-owned stormwater management facilities that serve multiple private owners. When separate maintenance fees are established, they will be distributed proportionally among the owners that utilize the facility for stormwater management.

CHAPTER 9

Submittal Requirements

CHAPTER 9. SUBMITTAL REQUIREMENTS

This chapter outlines the submittals required by the City of Oregon City (City) for stormwater and grading plans and other documents for review by the City's Community Development and Public Works Departments. This section is intended to standardize the submittals and clearly outline the minimum requirements. The requirement for a complete submittal package is intended to reduce the overall plan approval processing time. Refer to the City's engineering policies for additional information regarding plan submittals, as-built drawings, and the development approval process.

9.1 Submittal Requirements and Specifications

All applicants proposing development activities governed by these standards shall submit the plans, reports, studies, and information as required herein. The submittals shall be reviewed and approved by the City.

- The City may assist the applicant with submittal requirements by providing development review checklists and written and/or verbal direction of the minimum submittal requirements necessary to complete a comprehensive review of the plans.
- Submittals must be complete with minimum fees paid before they will be accepted by the City for review.
- Submittals will not be reviewed until a complete package has been submitted, including all the requirements listed in the applicable sections of this chapter.
- The City may require additional fees as applicable to be paid prior to review of any submittal.

9.1.1 Submittal for Land Use Application

When proposed development plans exceed the minimum thresholds listed in **Chapter 1**, applicants must submit the completed Site Assessment and Preliminary Design Checklist (see **Chapter 2),** including the following attachments, for City review and approval as part of the land use application process. These elements shall constitute a preliminary drainage report and form the basis for developing the stormwater management plan described in **Section 9.1.2**.

- Vicinity map
- Site assessment map (Existing Conditions)
- Preliminary site plan (Proposed Conditions)
- Infiltration test results, as required (see **Appendix D**)
- Downstream analysis, as required (see **Chapter 5**)
- Seasonal groundwater depth evaluation, as required
- Print-out results from the BMP Sizing Tool, or equivalent calculations (see **Chapter 4**)
- Documentation of potential high-risk site uses (see **Chapter 6**)
- Other supporting documentation required to evaluate the feasibility of the project

9.1.2 Submittal for Stormwater Management Plan Approval

A stormwater management plan shall be submitted as part of the development review and approval process. The applicant shall submit sufficient supporting information to justify that the proposed stormwater management design meets all the provisions within these standards and the land use conditions of approval.

The information shall include the following as required:

A. Engineered drainage plans (see **Section 9.3**).

B. Drainage report (see **Section 9.4**).

C. Stormwater best management practices (BMP) sizing calculations from the BMP Sizing Tool Method or the Engineered Method (see **Chapter 4**).

D. Geotechnical engineering report/geologist report with required supporting information, such as infiltration testing, soils data, and design/construction recommendations (see **Section 3.1 and Appendix D**).

E. Engineer's cost estimate.

F. Public/private stormwater easements and conservation easements.

G. Spill prevention, containment and countermeasure plan (see **Chapter 6**).

H. Erosion prevention and sediment control (EPSC) plan (see **Chapter 7**).

I. Operations and maintenance (O&M) plan (see **Chapter 8**).

J. Private facility maintenance covenant (see **Appendix F**).

9.2 Grading Plan Submittals

Plan submittals must be in accordance with the City's engineering policies. This section contains guidelines for three types of grading plan submittals made to the City: engineered grading plans (**Section 9.2.1**), abbreviated grading plans (**Section 9.2.2**), and residential lot grading plans (**Section 9.2.3**). Refer to Oregon City Municipal Code (OCMC) 13.12 and 15.48 to determine which type of grading plan submittal is required.

9.2.1 Engineered Grading Plans

All engineered grading plans shall be prepared, stamped with the seal of, and signed by a Professional Engineer registered in the State of Oregon. Engineered grading plans shall include at least the following information:

9.2.1.1 Scale

The plan view shall be no smaller than a scale of 1 inch equals 100 feet. Recommended scale is 1 inch equals 50 feet.

9.2.1.2 Cover sheet Requirements

The first sheet, or cover sheet if one is provided, shall include the following:

A. North arrow.

B. Vicinity map showing project boundaries, streets with street names, streams and rivers, city limit boundaries, and section-township-range.

C. Legal description of the project site.

D. Name, address and telephone of owner of the project.

E. Name, address, and telephone of the Project Engineer.

F. Vertical and horizontal datum for the project.

G. Legend for symbols used in the plans.

H. City planning and public works file number, as applicable.

9.2.1.3 Test Locations

Show locations of soil test pits, infiltration tests, and other environmental evaluations conducted on the site.

9.2.1.4 Existing Topography

Show existing topography, as per the requirements for a topographic map for engineered drainage plans (see **Section 9.3.3**). Show existing slopes steeper than two-horizontal to one-vertical (2h:1v), with the slopes indicated.

9.2.1.5 Finished grade contours

Show finished grade contours. Show locations of top and toe of cut and fill slopes. Indicate the slope for any proposed slope steeper than 2h:1v.

9.2.1.6 Information on Site Water Resources

Show information concerning wetlands, environmentally-sensitive areas, water courses, natural buffer areas, and similar applicable information. Also show the boundaries of mapped Flood Management Areas and Natural Resource Overlay Districts (Reference: OCMC 17.42 and 17.49).

9.2.1.7 Locations of Disturbed Areas

Show clearing and grubbing limits. Show areas to be graded, filled, excavated, or otherwise disturbed. The location of tops and toes of graded slopes shall be indicated, together with the proposed steepness and height of these slopes. The location of stockpiles, haul roads, and disposal sites shall also be indicated.

9.2.1.8 Quantities of Cut/Fill

Show quantities, in cubic yards, of excavation and/or fill throughout the project site.

9.2.1.9 Locations of Stormwater Features

Show existing channels, swales, and drainage pipes that either convey offsite stormwater through the project site, or collect and discharge site runoff from the project site.

9.2.1.10 Locations of Drainage Structures

Show locations of pipes, pipe information (size, materials, and slopes), manholes, catch basins, and inlet structures which are to be constructed as a part of the grading plan.

9.2.1.11 Construction information

Show information concerning construction methods, fill material specifications, source of fill material, compaction specifications, haul routes, and other construction information when known and applicable.

9.2.1.12 Standard grading notes

Engineered grading plans shall include, at a minimum, the standard grading notes per the City's Public Works standards.

9.2.2 Abbreviated Grading Plans

Abbreviated grading plans shall be prepared, stamped with the seal of, and signed by a Professional Engineer registered in the State of Oregon. Abbreviated grading plans shall include the following information:

9.2.2.1 Narrative

Applicants shall submit a narrative describing the project's parameters for grading the site to include the total square footage of new impervious surface. Describe what the project will accomplish and how the project will be executed. Describe how the grading will affect surface water drainage and what is being proposed to ensure that the new drainage pattern will direct the surface water to an approved outfall.

9.2.2.2 Drawings

Provide a simple sketch depicting the topographical lines of the site. Show the project's boundaries and the final desired grading lines versus the existing pre-grading lines. Show drainage patterns with the final outfall. Show a north arrow and at least one street for reference. Drawings shall be printed on paper no smaller than 8.5 by 11 inches, provided sufficient scale can be shown on this size. Otherwise, the drawing shall be printed on 11- by 17-inch paper.

9.2.2.3 Scale

The plan view shall be no smaller than a scale of 1 inch equals 100 feet. Recommended scale is 1 inch equals 50 feet.

9.2.3 Residential Lot Grading Plans

Residential lot grading plans shall be prepared, stamped with the seal of, and signed by a Professional Engineer registered in the State of Oregon. Residential lot grading plans shall include at least the following information:

9.2.3.1 Purpose

A residential lot grading plan illustrates that the storm drainage system is designed to accommodate the drainage patterns of the final graded project. It also provides protective slopes away from all sides of a building.

9.2.3.2 Approved discharge point

Stormwater from residential impervious surfaces (roofs, driveways, etc.) must be conveyed to an approved stormwater discharge point, which is commonly a stormwater management facility. The discharge point shall be labeled on the plan set and discussed in the report.

9.2.3.3 Protective slopes

Protective slopes away from all sides of all buildings are essential elements of all lot grading plans. The purpose of the protective slopes is to drain surface water away from all building walls and backfill areas. Where such a protective slope meets a slope that drains toward a building, a drainage swale of adequate width, depth, and longitudinal gradient is necessary to carry away surface water without flooding against buildings or ponding any lot areas.

9.2.3.4 Basic lot grading types

The Federal Housing Administration has established basic lot grading types. Others may exist depending on the uniqueness of the topography. The three basic lot types are as follows:

- Lot Grading Type A – all drainage to street.
- Lot Grading Type B – drainage to both street and rear of lot.
- Lot Grading Type C – all drainage to rear lot line.

See exhibits of lot grading types in the City's Public Works standards.

If Lot Grading Type B or C is selected, flows may not be channeled or concentrated onto adjacent properties without the creation of a private drainage easement to convey the water to a natural location or public stormwater system. See **Chapters 5 and 8** of these standards for additional discussions regarding drainage easements.

9.2.3.5 Relationship to Street Elevation

The single most important grade relationship for proper lot grading and drainage is top of foundation elevation in relation to street elevation. If the floor elevation is too low in relation to adjoining street grades, adequate protective slopes and drainage swales cannot be provided to drain the site satisfactorily.

Proper top of foundation elevation and lot grades for any lot can be obtained by establishing a lot grading control line on the plans and on the ground appropriate for the spe-

cific property. The line is located differently for each lot grading type as shown by the circles lettered A, B, C, etc., in the exhibit shown in the City's Public Works standards. Each control line starts at the top of the street curb near the indicated high or low lot corner and ends up at the top of the building foundation. Specific design criteria for the grading control line can be found in the residential lot grading notes in the City's current Public Works standards. The grading control line must be checked for each lot or parcel.

9.2.3.6 Rough Grading

Residential lot grading plans shall be based on final rough grading as-built conditions which are certified by the Project Engineer to ± 0.1 foot.

9.2.3.7 Scale

The plan view of detailed drainage plans shall be drawn at an appropriate engineering scale no smaller than 1 inch equals 50 feet; when more detail is required, a scale of 1 inch equals 20 feet is preferred.

9.2.3.8 Cover Sheet Requirements

The first sheet, or cover sheet if one is provided, shall include the following:

A. North arrow, vicinity map, project boundaries, streets with street names, streams and rivers, city limit boundaries, and section-township-range.

B. Legal description of project site.

C. Name, address, and telephone of the owner of the project.

D. Name, address, and telephone of the Project Engineer.

E. Datum for the project.

F. Legend for symbols used in the plans.

G. City planning and public works file number, as applicable.

H. Basis of bearing.

I. Onsite temporary benchmark.

9.2.3.9 Other Plan Sheet Requirements

A. Standard residential lot grading notes.

B. Standard detail for typical grading patterns.

C. Existing and proposed lot/parcel lines including intersecting adjoining properties.

D. Lot/parcel dimensions.

E. Lot/parcel identification.

F. Street centerlines.

G. Estimated building envelope (show a building envelope size, based on underlying zone setbacks that may be considered typical for the type of development and its location).

H. Existing or proposed curb; if no curb, centerline and edge of street pavement.

I. Top of curb elevations at intersection of curb and property line extensions (at ends of curb returns on corner lots); if no curb, centerline and edge of pavement elevations at intersection with property line extensions; elevations to hundredths of feet.

J. Existing contour lines (minimum 2-foot interval) including adjacent property within 50 feet.

K. Finished grade elevations to the nearest tenth of a foot[1].

L. Lot grading type for each lot or parcel.

M. Top of foundation elevations to the nearest tenth of a foot.

N. Flow arrows shown in street gutter.

O. Flow arrows shown in swales per typical lot grading type detail.

P. Existing and/or proposed storm system.

9.3 Engineered Drainage Plans

All engineered drainage plans shall be prepared, stamped with the seal of, and signed by a Professional Engineer, registered in the State of Oregon. Landscape plans for public stormwater management facilities shall be prepared, stamped with the seal of, and signed by a Landscape Architect, registered in the State of Oregon. The engineered drainage plans shall contain the following information.

9.3.1 Cover Sheet

The first sheet, or cover sheet if one is provided, shall include the following:

A. North arrow, vicinity map, project boundaries, streets with street names, shorelines, if any, city limit boundaries, if any, and section-township-range.

B. Legal description of project site.

C. Name, address, and telephone of owner of project.

D. Name, address, and telephone of Project Engineer.

E. Datum for project.

F. Legend, in the event that symbols are used in plans.

G. City planning and public works file number, as applicable.

H. Basis of bearing.

9.3.2 Index

At least one sheet shall contain a plan view of the entire project site. For large sites, the sheet containing the plan view of the entire site shall serve as an index to subsequent detailed plan sheets.

[1] When the average slope on a proposed lot in the likely location of the structure is greater than 5 percent, it is not necessary to show finished grade elevations to the nearest tenth of a foot on the residential lot grading plan. For these cases, identify a discharge location for roof drainage. (The average slope on a proposed lot shall be calculated by using the average of the three slopes at the two edges of the structure and the middle of the structure.)

9.3.3 Scale

The plan view of detailed drainage plans shall be drawn at an appropriate engineering scale no smaller than 1 inch equals 50 feet; when more detail is required, a scale of 1 inch equals 20 feet is preferred.

9.3.4 Topographic Plan

Plans shall include a topographic map showing existing conditions for the site, including:

A. Current topography for the site and extending 250 feet beyond project boundaries, where practicable. Existing topography for adjacent rights-of-way (ROWs) must be included for the full width of the ROW. Slopes steeper than 25 percent shall be identified.

B. Contours extending at least 250 feet beyond project boundaries, where practicable, and including the full width of adjacent ROWs. Contours shall be at maximum 5-foot vertical elevation intervals for steep locations (greater than 20 percent) and maximum 2-foot vertical elevation intervals for other locations. Locations and elevations of at least two benchmarks in the project vicinity must be shown.

C. Existing structures, including all structures within 250 feet of project boundaries, where practicable.

D. Existing access locations for the project site.

E. Existing project boundaries, ROWs, easements, jurisdictional boundaries, and sectional boundaries. All shall be clearly identified by note or symbol and key. Project boundaries shall include bearings and dimensions as referenced on existing documentation.

F. Adjacent streets, including street names, centerline, and ROW boundaries. Widths of adjacent ROW shall be noted.

G. Existing utilities, including franchised utilities located above or below ground and drainage facilities that transport surface water onto, across, or from the project site. The existing drainage pipes, culverts, and channels shall include the invert or flow line elevations.

H. Existing environmentally-sensitive areas (e.g., gullies, ravines, swales, wetlands, steep slopes, estuaries, springs, wetlands, creeks, lakes, etc.). For natural drainage features, show direction of flow and 100-year flood plain boundary (if applicable). Also, show the boundaries of mapped Water Quality Resource Areas and Flood Management Areas. (Reference: OCMC 17.49).

I. Existing wells, sanitary sewer systems, septic tanks, and drainfields within the project's boundaries. Show all known existing wells, sanitary sewer systems, septic tanks, and drainfields within 250 feet of project boundaries, to the extent possible with the adjacent property owner's cooperation. Describe abandonment procedure.

J. Existing fuel storage tanks.

9.3.5 Drainage Improvement Plans

Plans for proposed drainage improvements shall include the following:

A. Finished grades. Show the extent of cuts and fills by existing and proposed contours, profiles, and/or other explicit designations.

B. Existing structures to be removed.

C. Proposed developed areas and structures including roads and road improvements, parking surfaces, building footprints, walkways, landscape areas, etc. Depict all lines, grades, and gradients to the nearest 0.1 foot of proposed public roadways.

D. Proposed lot boundaries, tracts, and easements. Also, proposed changes to project boundaries, jurisdictional boundaries, and ROW boundaries.

E. Proposed sanitary sewers, water systems, and other related utilities, showing line and grade to the nearest 0.1 foot of all proposed utilities at crossings with the proposed drainage system.

F. Proposed fuel storage tanks. (see **Chapter 6.3**)

G. Locations of proposed structural source controls to address high pollutant potential site uses, if applicable (see **Chapter 6**).

H. Setbacks from existing environmentally sensitive areas.

I. Proposed drainage structures, including pipes, open channels, culverts, ponds, vaults, biofiltration swales, infiltration facilities, outfalls, riprap treatment, energy dissipaters, etc. All projects must identify conveyance including the emergency overflow path as described in **Chapter 5.**

J. Plan views of drainage conveyance facilities for which there is no accompanying profile view. These shall include the following information: pipe sizes, pipe types and materials, lengths of runs, gradients, and locations to the nearest 0.1 foot of pipes or channels, structure identifier (e.g., catch basin/manhole number), type of structure (e.g., Type 2 CB), exact location of structures (e.g., station and offset mainline stationing and/or street centerline stationing, or dimensioning to the nearest 0.1 foot), invert elevations in/out of structures to the nearest 0.1 foot, and top elevations of structures to the nearest 0.1 foot. Notes shall be included referencing details, cross-sections, profiles, etc.

K. Locations of all gutter or ditch flowlines, including flow arrows indicating direction of flow.

L. Profiles for roadway systems with curbs. If a roadway system with curbs is to be constructed in a proposed or existing public ROW, profiles to the nearest 0.1 foot for the following items will be a part of the plan set:

- Curb returns with elevations shown for the beginning of curb (PC), end of curb (PT), quarter points, and low points. Should the roadway section be warped in the vicinity of the PC or PT to manipulate the low point location (sometimes done to move a catch basin location away from a handicap ramp), this area of warping will also be shown in this profile. Straight-line segment between data point profiles will be allowed, as they should communicate the design intent.

Station equations relative to street centerline stationing shall be shown for the PC and PT.

- Cul-de-sacs and knuckles with elevations shown for the PC, PT, low points, and 25-foot intervals along the curve. Station equations relative to street centerline stationing shall be shown for the PC and PT.
- Pavement spot elevations within some major intersections may be necessary.
- Alignment data for proposed roadways (centerline bearings and distances, curve data, and other pertinent data).
- See the City's engineering policies for additional requirements.

M. Proposed construction phasing.

9.3.6 Plan and Profile

In existing and proposed ROWs and storm easements, drainage conveyance facilities shall be shown in profile view. Where practicable, the stationing of the plan view should line up vertically with the stationing of the profile view.

Profile views shall be located below the plan view on the same sheet and include the following:

A. Existing and finish grades.

B. Proposed drainage pipes, channels, and structures.

C. Existing underground utilities where such utilities cross proposed drainage facilities.

D. Pipe sizes.

E. Pipe types and materials.

F. Lengths of runs, gradients, and exact locations of pipes or channels to the nearest 0. 1 foot.

G. Structure identifier (e.g., catch basin/manhole number).

H. Type of structure (e.g., Type 4A Inlet).

I. Exact location of structures (e.g., station and offset mainline stationing and/or street centerline stationing, or dimensioning to the nearest 0.1 foot).

J. Invert elevations in/out of structures, and top elevations of structures.

K. See the City's engineering policies and standard drawings for additional requirements.

9.3.7 Construction Notes

Construction notes shall appear on drainage plans. These notes shall include, at a minimum, the drainage notes included in the City's engineering policies and standard drawings.

9.3.8 Cross Sections

Cross sections shall be provided for the following:

A. Roadways, including access roads.

B. Stormwater management facilities, including rain gardens, stormwater planters, pervious pavements, and detention ponds. The cross sections shall graphically illustrate the following elevations to the nearest 0.1 foot:

- The maximum water surface elevation for the 10-year design storm
- The proposed dead storage water surface elevation (as applicable)
- Amended soil section or porous pavement section (as applicable)

C. Proposed ditches and swales.

9.3.9 Drainage Structure Details

Separate detail sheets shall be provided for all proposed drainage structures and stormwater management facility control structures for which there is insufficient information in the plan view.

9.3.10 Erosion Prevention and Sediment Control Plan

Include detailed erosion prevention and sediment control plans, following the requirements of **Chapter 7** and the City's **Erosion Standards**.

9.3.11 Stormwater Management Facility Grading Plan

A detailed grading plan at a scale of 1 inch equals 20 feet shall be provided for all landscaped stormwater management facilities. This plan shall include the following:

A. Current ground contours (screened) and proposed ground contours at a minimum of a 2-foot contour interval. Slopes steeper than 6h:1v shall be identified.

B. Location of top and toe of slope.

C. Limits of embankment designed to impound water.

D. Location of all drainage structures as well as any other piped utilities in the vicinity.

E. Flow route of the secondary/emergency overflow system.

F. Maintenance access, as applicable.

9.3.12 Landscape Plan

Landscape plans for publicly-maintained stormwater management facilities shall be prepared, stamped with the seal of, and signed by, a Landscape Architect, registered in the State of Oregon. Plans for privately-maintained stormwater management facilities do not require the involvement of a Landscape Architect.

A detailed landscape plan, at a scale of 1 inch equals 20 feet shall be provided for each landscaped stormwater management facility. This plan may be combined with the stormwater management facility grading plan (**Section 9.3.10**). See **Appendix A** for further guidance. The landscape plan shall include the following:

A. Existing vegetation to be preserved and protective construction fencing.

B. Areas of stormwater management facilities to be designated with construction fencing to protect from construction traffic and compaction.

C. Final ground contours at a minimum of a 2-foot contour interval.

D. Location of top and toe of slope.

E. Limits of embankment designed to impound water.

F. Location of all drainage structures as well as any other piped utilities in the vicinity.

G. Limits of areas to receive amended topsoil and growing medium.

H. A plant list or table, including botanic and common names, size at time of planting, quantity, spacing, type of container, evergreen or deciduous, and other information related to the facility-specific planting, in accordance with landscape industry standards.

I. Location of stockpiles (erosion protection measures must be shown on the EPSC plan).

J. Method of temporary irrigation to be used for the establishment period.

K. Location of maintenance access, as applicable.

9.4 Drainage Report

The drainage report shall accompany the drainage improvement plans to complete documentation of the design and design intent. The drainage report shall be prepared by and bear the seal and original signature of a Professional Engineer registered in the State of Oregon. The Professional Engineer shall ensure that the drainage report matches and accounts for the design displayed on the grading and drainage construction plans.

9.4.1 Drainage Report Contents

The drainage report shall contain the following information:

A. **Cover sheet**, including the project name, City's planning and public works file number (as applicable), Project Engineer's name, address and telephone number, Applicant's name, and date of submittal.

B. **Table of contents**, showing the page numbers for each section of the report, including exhibits, appendices, and attachments.

C. **Vicinity map**.

D. **Basin maps** that show the following:

- Project boundaries
- Offsite contributing drainage basins
- Onsite drainage basins
- Approximate locations of all major drainage structures
- The course of stormwater originating from the subject property and extending all the way to the closest receiving body of water
- Reference to the source of the topographic base map (e.g., U.S. Geological Survey [USGS])
- Map scale
- North arrow

E. **Project Description**. Describe the project, including the size and location of the project site, address or parcel number and legal description of the property, property zoning, proposed land use, proposed site improvements, proposed construction of impervious surfaces and proposed landscaping.

F. **Required Permits**. Describe other permits required (e.g., Joint Oregon Division of State Lands/U.S. Army Corps of Engineers 404 fill permit, National Pollutant Discharge Elimination System 1200-C permit, Oregon Department of Environmental Quality permits, etc.) and submit application summaries.

G. **References to relevant reports**. Identify basin plans, flood studies, groundwater studies, wetland designation, water quality resource areas designation, sensitive area designation, environmental impact statements, lake restoration plans, water quality reports, etc. Where such reports impose additional conditions on the project, those conditions shall be included in the report.

H. **Existing Conditions**. Describe existing site conditions, including the following:

- Site topography, land cover, and land use on the project site and abutting properties (i.e. spot grades and contours)
- Hydrologic conditions including natural and constructed channels, creeks, lakes, ponds, wetlands, ravines, gullies, steep slopes, springs, and other environmentally-sensitive areas on or adjacent to the project site
- Points of discharge for existing drainage from the project site
- Offsite drainage to the property, based on a field investigation, and any identified drainage and/or erosion problems
- Boundaries of mapped Natural Resource Overlay Districts and Flood Management Overlay Districts, and groundwater sensitive areas (reference maps and reports as applicable)
- Locations of known /recorded wells on the project site and on adjacent property within 250 feet of the project boundaries
- Locations of existing fuel tanks, in-use or abandoned, within the project boundaries
- General soils conditions present within the project site

I. **Drainage Basin Description.** Describe the drainage basins to which the project site contributes runoff and identify the receiving waters for each of these drainage basins.

J. **Developed Site Drainage Conditions**: Describe the land cover resulting from the proposed project. Describe the proposal for the collection and conveyance of site runoff and offsite drainage areas. Describe proposed stormwater management facilities.

K. **Downstream Analysis**: Conduct and document the downstream analysis that encompasses the entire tributary drainage area that drains to the project site and extends downstream as required in **Chapter 5**. The downstream analysis shall include a map (minimum USGS 1:24000 Quadrangle Topographic Map) to delineate the study area. Describe in narrative form observations regarding the makeup and general condition of the drainage system. Include such information as pipe sizes, channel characteristics, and stormwater facilities.

L. **Contributing Areas**: Define and quantify the area and land use draining to each proposed stormwater management facility.

M. **Hydraulic Design Computations**. Document the methodology, assumptions, and results of calculations to support the design of all proposed stormwater management facilities and existing and proposed conveyance systems. Include a description of how the stormwater system will function during the water quality storm and peak flow events. Printouts from the BMP Sizing tool or equivalent calculations to document the Engineered Method shall be included in an appendix. Include capacity and backwater analyses when required either as part of the proposed drainage design or as a part of the downstream analysis. Other flow routing computations may be needed for wetland impact analysis or for flood plain analysis.

N. **Emergency Overflow**. Provide a narrative description of the 100-year overflow path from each stormwater management facility and storage capacity of all stormwater management facilities during the 100-year event.

O. **Erosion Prevention and Sediment Control**. Describe proposed strategy to address erosion prevention and sediment control (see **Chapter 7**).

P. **Maintenance Strategy.** Provide a narrative discussion that addresses the O&M needs of the proposed stormwater management facilities (see **Chapter 8**).

Q. **Landscape Plan.** Provide a narrative discussion about plant material selection and design objectives, such as shading, aesthetics, and/or temperature control (see **Appendix A**).

9.4.2 Drainage Report Appendices

Appendices to the drainage report shall include technical information including, but not limited to the following:

A. Site planning checklist (see **Chapter 2**).

B. Soils report and/or geotechnical report, where applicable (see **Section 3.1**).

C. BMP Sizing Tool or Engineered Method design calculations for all proposed stormwater management facilities (see **Chapter 4**).

D. Runoff calculations, including time of concentration calculations (see **Chapter 5**).

E. Conveyance system capacity calculations (See **Chapter 5**).

F. Curb and catch basin inlet sizing and spacing to meet the requirements of **Section 5.7.2** (street flooded width calculations as required).

G. Energy dissipater calculations.

H. Downstream analysis.

I. O&M manual: Required for stormwater management facilities.

- For privately owned and maintained facilities: two copies of the O&M manual shall be attached to the Maintenance Covenant and submitted to the City for review prior to recording.
- For publicly owned and maintained facilities two: copies shall be sent to Public Works prior to acceptance.
- See the City's engineering policies for quantity and format of required documents.

9.5 Standard Drawings and Details

The City's standard drawings shall be used for public and private development projects and cannot be modified by designers on a project-by-project basis. It is the responsibility of the project engineer of record to incorporate these drawings as originally intended.

9.6 Plan Review and Approval Processes

The City's plan review and approval requirements are outlined in OCMC Title 17. The process may vary from one application, submittal, and building permit to another. To obtain further information on a specific plan review or permit process, contact the City.

9.7 Construction Considerations

If required, the engineer, contractor, applicant, City, and/or other related agency representatives will hold a pre-construction meeting to share information and requirements as specified in the stormwater management plan. Upon final completion of the construction, the Engineer of Record will certify that the construction as-built drawings are complete in all respects and built per the approved construction documents. At a minimum the following shall be done prior to requesting the final inspection of the stormwater facilities:

A. Clean all stormwater management facilities of sediment and debris.

B. Submit a Certification of Completion to certify that the project was constructed in accordance with the approved plans and City standards.

C. Submit a Vegetated Planting Certification to certify that water quality plantings were constructed in accordance with the approved plans and these standards.

D. Submit as-built drawings according to **Section 9.9**.

E. Submit storm video testing and reports for all public storm system construction.

F. Submit engineer inspection reports.

9.8 Warranty Surety

The City may require the applicant to submit a financial surety in a form acceptable to the city to guarantee performance or warranty of the requirements of these standards. In general, the warranty surety ensures that the owner/ applicant agrees to maintain, repair, replace, and be responsible for damage to the storm sewer for a warranty period of 2 years following the date

the City deems the improvements to be complete. Upon default, the City may perform the remaining work or remedy violations and draw upon the surety or available funds.

9.9 As-built Submittals

All drainage plans shall be as-built prior to the acceptance of the project. As-built drawings are necessary to ensure that the project was constructed per the approved plans. As-builts may be required in paper, Mylar, and/or electronic AutoCAD files, as determined by the City. The Engineer of Record is responsible for record keeping, inspection and preparation of the as-built drawings. As-built drawings shall contain, at a minimum, the following information:

A. Each page shall be stamped by the Professional Engineer and stated in writing that it is an as-built drawing.

B. Show final storm pipe material type in profile view.

C. Show alignment changes, slope changes, pipe size changes and changes in construction materials.

D. Indicate areas of rock removal not completed by standard backhoe (i.e., splitter or blasting).

E. Show storm service connections for each building lot with a callout showing the mainline stationing, pipe size, length, and depth at the property line.

F. Street stationing and other related information is allowed on the construction plans; however, this must be removed on the accepted as-built drawings.

G. Remove all hatching associated with material type.

H. Paper and electronic as-built drawings shall become the unencumbered property of the City and are public records that may be distributed as the City deems necessary.

I. The timely submittal of as-built plans is the responsibility of the Engineer of Record. The City requires all as-built drawings to be submitted within 60 days of completion of the project.

J. See the City's engineering policies for current as-built requirements.

Stormwater and Grading Design Standards

APPENDIX A

Facility Planting Guidance

APPENDIX A. FACILITY PLANTING GUIDANCE

A.1 Introduction

This appendix provides information on plant selection and design guidance for a variety of stormwater management facilities. The role of plants in facilities is critical. The success or failure of a facility can depend on the proper selection and location of plants. The main purpose of vegetation in facilities is to provide the maximum amount of water quality benefit for stormwater management.

A complex combination of physical and biological processes work in tandem to maximize water quality within stormwater management facilities. In addition, there are a range of considerations for plant selection and design, including the site context, protection of native biodiversity, creation of habitat, limitation of noxious invasive species, site context, and aesthetics. The following sections provide guidance for the proper selection of plants.

This section provides guidance for preparing planting plans for stormwater management facilities including developing the plan, specifying growing media material, and selecting plant species. The guidance shall be incorporated into the landscape plan for each vegetated stormwater management facility proposed on a project.

> *"The surface area of a typical stormwater facility allows runoff to pond and evaporate while sediments settle into a layer of mulch. The organic mulch layer prevents soil bed erosion and retains moisture for plant roots. It also provides a medium for biological growth and the decomposition or decay of organic matter. The soil stores water and nutrients to support plant life. Worms and other soil organisms are very good at degrading organic pollutants, like petroleum-based compounds. They also help mix organic material, increase aeration, and improve water infiltration and water holding capacity. Bacteria and other beneficial soil microbes process the majority of pollutants, including most of the nitrogen. The stiff structure of plants such as rushes and sedges slows water passage and traps sediments within the surface area of the facility."*
>
> –City of Portland, BES
> *Stormwater Management Manual*, 2008

A.2 General

All vegetated stormwater management facilities proposed for City maintenance shall have a Landscape Plan prepared, stamped, and signed by a Landscape Architect or Professional Engineer.

A.2.1 Native and Adapted Plants

Plants approved for stormwater management facilities can be grouped into three categories: natives, native cultivars, and non-native adapted plants.

Native plants are plants that are indigenous to our specific region. They typically require minimal care once they are planted because they have evolved and adapted to the growing conditions and climate of the region. Because of their place in the local ecology, native plants also provide habitat value for birds and other local species. For these reasons, native plants and/or native cultivars are required for stormwater management facilities and should be used to the maximum extent practicable. In designated vegetated buffers and sensitive areas only native plants are allowed in stormwater management facilities.

Native cultivars are cultivated varieties of native plants produced by horticultural techniques and are not normally found in wild populations. Cultivars are bred for certain desired characteristics that make them different from their native counterparts. Native cultivars may be selected over a native plant if it is more suitable for certain conditions, such as densely urbanized applications. For example Kelsey Dogwood (*Cornus sericea 'Kelseyi*) is a cultivar of the native Red Twig Dogwood (*Cornus sericea*). Kelsey Dogwood has been selectively bred to be much smaller at maturity than red twig dogwood, which can be advantageous in small-scaled urban stormwater planters. In such instances, the native cultivar is preferred because it will not outgrow the facility or require frequent pruning maintenance, while still offering the same vegetative advantages as its native counterpart.

Non-native adapted plants are plants that are not native to our region, but have certain characteristics that make them very useful and well adapted to stormwater management facilities. The City prefers that native and native cultivars be used whenever practical, but will allow non-native adapted plants where appropriate.

A.2.2 Vegetated Facilities and Habitat

Vegetated stormwater management facilities can be designed to mimic the natural habitats, processes, and hydrology of a particular site.

The environmental benefits of these facilities include:

- Less disturbance to sites than conventional stormwater management methods
- Reduced and delayed peak stormwater flows
- Reduced discharge of pollutants
- Increased planted space and habitat
- Creation of a multifunctional landscape that enhances visual and functional amenities

Nearly all vegetated stormwater management facilities have the potential to create and improve habitat on and near the site through planting and vegetation. Each vegetated stormwater management facility has planting design guidelines such as required plant spacing and plant types, but there is flexibility to maximize habitat for a variety of organisms such as invertebrates, amphibians, small mammals, and birds. Created habitat can also enhance conditions for predators that feed on mosquitoes. These on-site benefits generate off-site benefits by reducing the negative environmental effects associated with urban development.

A.2.3 Climate and Microclimate

All stormwater management facility vegetation should be well-adapted to both the northwest regional climate and the facility's microclimate. Although regional climate dictates average seasonal temperatures, amount of rainfall and available daylight, site-specific microclimates can vary considerably and should be factored into the planting design, particularly in an urbanized environment. For example, sword fern is a plant native to woodlands of the Pacific Northwest that likely would not survive if placed in a south facing flow-through planter with direct sun exposure most of the day and heat radiating off the building. Sword fern placed in a flow-through planter on the north side of the building likely would thrive.

A.2.4 Habitat Diversity and Layering of Plants

Natural environments in the Pacific Northwest are characterized by diverse, layered plant habitats. A range of habitats can be created in vegetated stormwater management facilities by selecting complementary vegetation to plant together, such as groundcovers, perennials, shrubs, and trees. The structural variety of a diversified planting design can also improve site aesthetics. Plant selection should reflect this natural ordering of plantings, as well as mimicking a mixture of deciduous and evergreen materials.

A.2.5 Planting Zones by Facility Type

Vegetation for stormwater management facilities is categorized according to the degree of soil moisture that will be encountered in the facility. Planting conditions for sloped, basin-like stormwater management facilities such as swales, rain gardens and detention ponds have a moisture gradient which varies with the designed maximum water depth, the time it takes for a facility to drain after a storm event, and the steepness of the side slopes. Planting conditions are more uniform for planters and vegetated filter strips because of the relatively uniform and flat surface. For green roofs, the critical planting factor is the depth of the planting soil.

Consideration of these zones will enhance the success of a facility's planting design. The zone from the bottom of the facility to the designed high water line or top of freeboard should be planted with plants that tolerate occasional standing water and wet-to-moist conditions. Above the designed high water line vegetation is not affected by stormwater entering the facility and should be planted with species well-suited to the local climate and site-specific conditions. **Figure A-1** (next page) shows the planting zones for typical facility types.

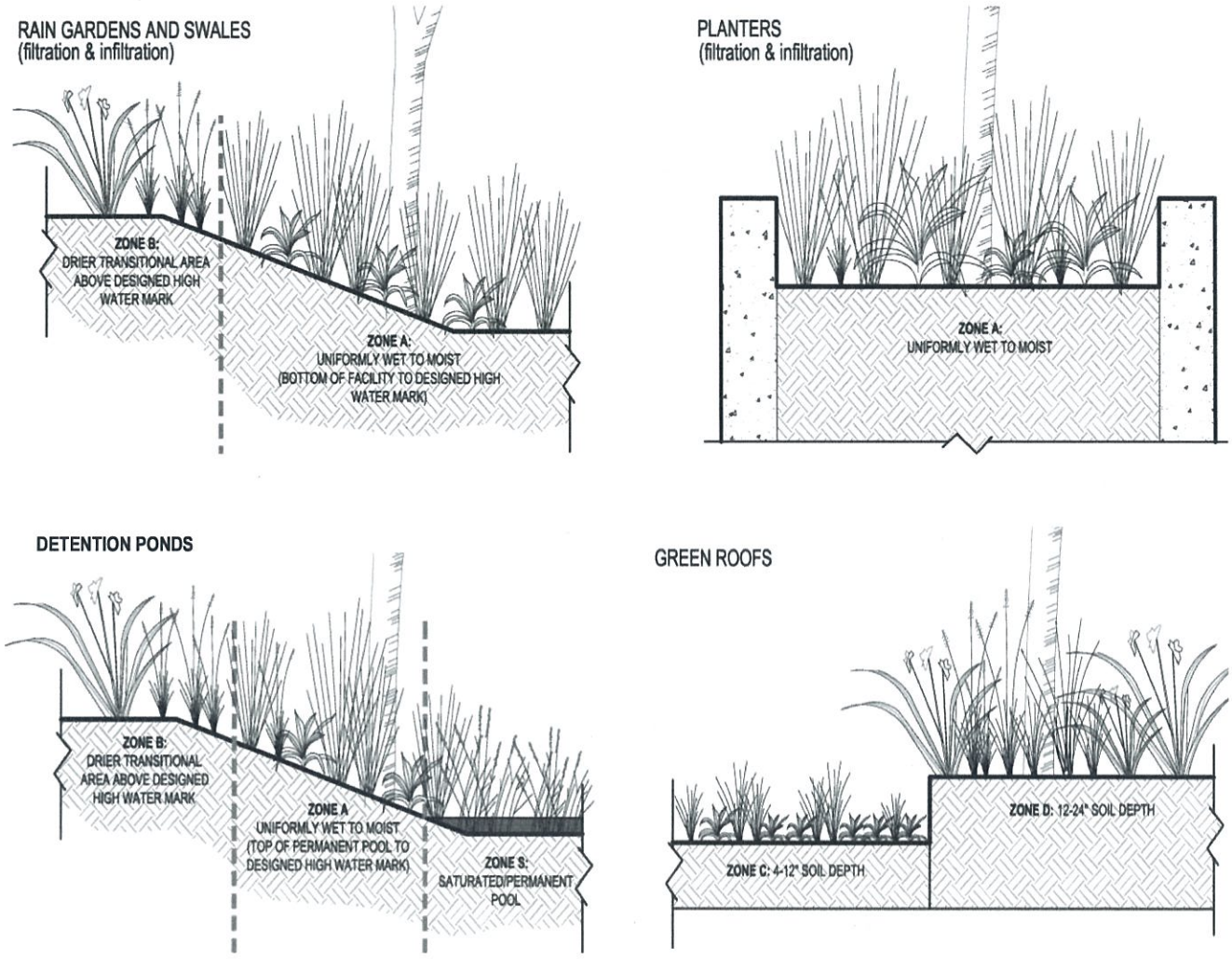

Figure A-1. Planting zones by facility type

A.2.6 Maintenance

Water efficient irrigation shall be applied for at least the first 2 years after construction of the facility, particularly during the dry summer months, while plantings become established. The applicant may choose the irrigation method such as by truck or irrigation system. When practicable, the on-site irrigation is recommended to maintain the plant survivability. Temporary irrigation will require its own service meter and backflow prevention device. Temporary irrigation systems must be fully removed before the City releases the warranty surety bond.

Additional maintenance practices include:

- Check regularly for weeds. Remove weeds or invasive plants such as blackberries and ivy, and implement a weed control program as needed.
- Check mulch regularly to maintain uniform coverage. Many vegetated stormwater management facilities specify a mulch cover such as river rock to prevent erosion and moisture loss during dry periods.
- Replant bare patches as necessary to comply with the facility's coverage requirements and maintenance plan.
- For a full list of maintenance practices for each type of stormwater management facility, see **Appendix C**.

A.3 Planting Plan Methods

Planting plans shall be required for each vegetated stormwater management facility. Planting plans should address four major components: hydrology, soils, plant materials, and maintenance. When developing planting plans, the following steps should be used:

Step 1: Assess Hydrologic and Hydraulic Conditions

Use the hydrologic and hydraulic analysis for the facility to determine water levels for various storm events. Use the cross sections in **Figure A-1** to assign appropriate hydrologic zones to the facility and identify the hydrologic zones on the plan. Most facilities include one or more of the following planting zones with respect to hydrology during the growing season:

- Wet (Zone S): standing or flowing water/nearly constant saturation; anaerobic soils
- Moist (Zone A): periodically saturated; anaerobic and/or aerobic soils
- Dry (Zones B, C, and D): infrequent inundation/saturation, if any; aerobic soils

Step 2: Plant Selection

Identify plants to be preserved, select plant materials, designate quantities, placement and planting zones.

A. *Preservation:* Every effort shall be made to protect a site's existing native vegetation. Native vegetation along Sensitive Areas and Vegetated Buffers shall be retained to the maximum extent practicable.

B. *Selection:* Plant selection shall be from the plant lists found in **Tables A-1** through **A-4**. Unless approved by City staff, planting restrictions are as follows:

- Deep rooting trees and shrubs (e.g., willow) shall not be planted on top of concrete pipes, or within 10 feet of retaining walls, inlet/outlet structures or other culverts.
- Large trees or shrubs shall not be planted on berms over 4 feet tall that impound water. Small trees or shrubs with fibrous root systems may be installed on berms that impound water and are less than 4 feet tall.

C. *Quantities:* Plant quantities are calculated per 100 square foot of facility area. Plant quantities shall be calculated based on spacing and plant container size.

PLANT SPACING	NUMBER OF PLANTS PER 100 SQUARE FEET	TYPICAL PLANT / CONTAINER SIZES
6"	461	PLUGS
12"	115	SP #4 (4" POTS)
18"	51	#1
24"	27	#2
36"	18	SHRUBS & TREES
4'	7	SHRUBS & TREES
5'	4	SHRUBS & TREES
6'	3	SHRUBS & TREES

- One tree is required for every 250 square feet of facility area. No trees, with the exception of street trees, are required for facilities less than 250 square feet or are narrower than 4 feet.

D. *Minimum Sizes:*

- Herbaceous plants: SP #4 container
- Small shrubs/groundcover: #1 container
- Large shrubs/small trees: #2 container or 30" Height
- Deciduous trees: 1" caliper
- Evergreen trees: 6' height

E. *Design:* All planting plans must have a minimum of 50 percent evergreen plants and at least two species from the herbaceous and small shrubs/groundcover plant communities. However, trees are not required or recommended in fully lined facilities.

Step 3: Installation

Determine plant installation requirements and assign specifications to plans.

A. *Timing:* Recommended installation timeframes are as follows. Planting or seeding outside these times may require additional measures to ensure survival which shall be specified on the plans and require City approval.

- Containerized stock: February 1 through May 1 and October 1 through November 15
- Bare root stock: December 15 through April 15
- Seeding: March 15 through October 15

B. *Erosion Control:* Grading, soil preparation, and seeding shall be performed during optimal weather conditions and at low flow levels to minimize sediment impacts. Site disturbance shall be minimized and desirable vegetation retained, where possible. Slopes shall be graded to support the establishment of vegetation. Where seeding is used for erosion control, an appropriate native grass, *Regreen* (or its equivalent), or sterile wheat shall be used to stabilize slopes until permanent vegetation is established. Biodegradable fabrics such as coir, coconut or approved jute matting (minimum ¼ inch square holes), may be used to stabilize slopes and channels. Fabrics such as burlap may be used to secure plant plugs in place and to discourage floating upon inundation. No plastic mesh that can entangle wildlife is permitted. Consult **Chapter 7** for additional information.

C. *Mulching:* Mulching for stormwater management facilities shall be per **Section A.4.7**.

D. *Plant Protection from Wildlife:* Depending on site conditions, appropriate measures shall be taken to limit wildlife-related damage.

E. *Irrigation:* Appropriate plant selection, along with adequate site preparation and maintenance, reduces the need for irrigation. However, unless site hydrology is currently adequate, a City approved irrigation system or equivalent shall be used during the 2-year plant establishment period. Watering shall be at a rate to maintain all plantings in a healthy thriving condition during establishment. Other irrigation techniques, such as deep watering, may be allowed with prior approval by City staff.

F. *Access:* Maintenance access requirements are provided in **Chapter 4.**

Step 4: Monitoring and Maintenance

Determine plant monitoring and maintenance requirements.

A. *Monitoring:* Site visits are necessary throughout the growing season to assess the status of the plantings, irrigation, mulching, etc. and ensure successful plant establishment. The determination of a successful plant establishment period will be made by periodic plant establishment inspections. A successful planting establishment for each inspection is defined as:

- All plants are surviving and have vigorous growth.
- Plants are free of insects and disease.
- Plants show signs of continuing health.
- Plants have not reached permanent wilting point.

B. *Weed Control:* The removal of non-native, invasive weeds shall be necessary throughout the maintenance period, or until a healthy stand of desirable vegetation is established.

C. *Plant Replacement and Preservation:* At the end of the maintenance period all plants not in a healthy growing condition will be noted and as soon as seasonal conditions permit shall be removed from the site and replaced with plants of the same species and size as originally specified. Prior to replacement, the cause of loss (wildlife damage, poor plant stock, etc.) shall be documented with a description of the corrective actions taken.

Step 5: Construction Documents and Specifications

The construction documents and specifications shall include:

A. If applicable, *Sensitive Area* boundaries. Orange construction fencing shall be noted at buffer boundaries as well as at encroachment limits during construction.

B. Site preparation plan and specifications, including limits of clearing, existing plants and trees to be preserved, and methods for removal and control of invasive, non-native species, and location and depth of topsoil and/or compost to be added to planting area.

C. Planting plan and specifications, including all of the following:

- Planting table that documents the common name, scientific name, distribution (zone and spacing), condition and size of plantings
- Installation methods for plant materials
- Mulching
- Plant tagging for identification
- Plant protection
- Seeding mix, methods, rates, and areas

D. Irrigation plan and specifications, including identification of water source, and, maintenance of the system.

E. Maintenance schedule; including responsible party and contact information, dates of inspection (minimum three per growing season and one prior to onset of growing season) and estimated maintenance schedule (as necessary) over the 2-year monitoring period.

F. Access points for installation and maintenance including vehicle access if required.

G. Standard drawing details (north arrow, scale bar, property boundaries, project name, drawing date, name of designer and Property Owner).

A.4 Stormwater Management Facility Growing Medium

A soil analysis is required for the stormwater management facility growing medium for all public facilities and private facilities. A soil analysis is not required for single-family residential sites. The source of the growing medium must be identified in the construction documents.

Growing media specifications shall conform to the following:

A.4.1 Standard Blend for Public and Private Facilities

Use this blend for all vegetated stormwater management facilities.

A. *General Composition*: The medium shall be a blend of loamy soil, sand, and compost that is 30 to 40 percent compost (by volume) and meets the criteria in this specification.

B. *Analysis Requirements for Blended Material:* A particle gradation analysis of the blended material, including compost, shall be conducted in conformance with ASTM C1 17/C136 (AASHTO T1 1/T27). The analysis shall include the following sieve sizes: 1 inch, 3/8 inch, #4, #10, #20, #40, #60, #100, and #200. The gradation of the blend shall meet the following gradation criteria.

Sieve size	Percent passing
1 inch	100
# 4	60 -100
# 10	40-100
# 40	15-50
# 100	5-25
# 200	5-15

The blend shall have a Coefficient of Uniformity (D60/D10) equal to or greater than 6 to ensure that it is well graded (has a broad range of particle sizes). The coefficient is the ratio of two particle diameters on a grain-size distribution curve; it is the particle diameter at 60 percent passing divided by the particle diameter at 10 percent passing.

C. *Organic Matter Content:* An analysis of soil organic matter content shall be conducted in conformance with ASTM D2974 (loss on ignition test). The soil organic matter content shall be a minimum of 10 percent, as reported by that test.

D. *pH:* The blended material shall be tested and have a pH of 5.5 to 7.

A.4.2 General Requirements for Blended Material

The applicant will be responsible for assuring that all of the following general requirements for the blended material are met and providing documentation when requested:

A. The material shall be loose and friable.

B. It shall be well mixed and homogenous.

C. It shall be free of wood pieces, plastic, screened and free of stones 1 inch (25 mm) or larger in any dimension; free of roots, plants, sod, clods, clay lumps, pockets of

coarse sand, paint, paint washout, concrete slurry, concrete layers or chunks, cement, plaster, building debris, oils, gasoline, diesel fuel, paint thinner, turpentine, tar, roofing compound, acid, and other extraneous materials harmful to plant growth; free of weeds and invasive plants including but not limited to:

1. *Cirsium arvense* (Canadian Thistle)
2. *Convolvulus spp.* (Morning Glory)
3. *Cytisus scoparus* (Scotch Broom)
4. *Dipsacus sylvestris* (Common Teasel)
5. *Festuca arundinaceae* (Tall Fescue)
6. *Hedera helix* (English Ivy)
7. *Holcus canatus* (Velvet Grass)
8. *Lolium spp.* (Rye Grasses)
9. *Lotus corniculatus* (Bird's Foot Trefoil)
10. *Lythrium salicaria* (Purple Loose Strife)
11. *Melilotus spp.* (Sweet Clover)
12. *Myriophyllum spicatum* (Eurasian Milfoil)
13. *Phalaris arundinaceae* (Reed Canary Grass)
14. *Rubus discolor* (Himalayan Blackberry)
15. *Solanum spp.* (Nightshade)
16. *Trifolium spp.* (Clovers), and

D. It shall not be infested with nematodes, grubs, other pests, pest eggs, or other undesirable organisms and disease-causing plant pathogens; friable and with sufficient structure to give good tilth and aeration.

E. Continuous, air-filled, pore-space content on a volume/volume basis shall be at least 15 percent when moisture is present at field capacity. Soil shall have a field capacity of at least 15 percent on a dry weight basis.

F. It shall have no visible free water.

G. It shall be obtained from naturally well drained construction or mining sites where topsoil occurs at least 4 inches deep; it shall not be obtained from bogs, wetlands, or marshes.

A.4.3 Compost

The compost shall be derived from plant material and provided by a member of the U.S. Composting Council Seal of Testing Assurance (STA) program. A list of local providers can be accessed at www.compostingcouncil.org.

The compost shall be the result of the biological degradation and transformation of plant- derived materials under conditions designed to promote aerobic decomposition. The material shall be well composted, free of viable weed seeds, and stable with regard to oxygen consumption and carbon dioxide generation. The compost shall have no visible free water and produce no dust when handled. It shall meet the following criteria, as reported by the U.S. Composting Council STA Compost Technical Data Sheet provided by the vendor.

A. 100 percent of the material must pass through a 1/2-inch screen.

B. The pH of the material shall be between 6 and 8.

C. Manufactured inert material (plastic, concrete, ceramics, metal, etc.) shall be less than 1.0 percent by weight.

D. The organic matter content shall be between 35 and 65 percent.

E. The soluble salt content shall be less than 6.0 mmhos/cm.

F. Germination (an indicator of maturity) shall be greater than 80 percent.

G. The stability shall be between classes 5-7.

H. The carbon/nitrogen ratio shall be less than 25:1.

I. The trace metals test result = "pass."

A.4.4 Documentation

The City requires the applicant to review and retain the following documentation for stormwater management facility growing medium. This documentation shall be submitted upon request.

A. Documentation for the analysis described in **Section A.4.1.B** of this specification (particle gradation with calculated coefficient of uniformity; organic matter content; pH). The analysis shall be performed by an accredited laboratory with certification maintained current. The date of the analysis shall be no more than 90 calendar days prior to the date of the submittal. The report shall include the following information:

- Name and address of the laboratory
- Phone contact and e-mail address for the laboratory
- Test data, including the date and name of the test procedure

B. A compost technical data sheet from the vendor of the compost. The analysis and report must be consistent with the sampling and reporting requirements of the U.S. Composting Council STA program. The analysis shall be performed and reported by an approved independent STA program laboratory.

- The date of the analysis shall be no more than 90 calendar days prior to the date of the submittal.
- A description of the location, equipment, and method proposed to mix the material.

A.4.5 Growing Medium Installation

A. *Protection of the Growing Medium:* The growing medium shall be protected from all sources of contamination, including weed seeds, while at the supplier, in conveyance, and at the project site.

B. *Placement of the Growing Medium:* The medium shall be placed in loose lifts, not to exceed 8 inches each and each lift shall be compacted with a water-filled landscape roller. The material shall not otherwise be mechanically compacted.

C. *Timing of Plant Installation:* Weather permitting, plants shall be installed as soon as possible after placing and grading the growing medium in order to minimize erosion and further compaction.

D. *Erosion Control:* Temporary erosion control measures are required until permanent stabilization measures are functional, including protection of overflow structures.

E. *Protection of the Facility:* In all cases, the facility must be protected from foot or equipment traffic that is unrelated to the construction of the facility. Temporary fencing or walkways should be installed as needed to keep workers, pedestrians, and equipment out of the facility. Under no circumstances should materials and equipment be stored in the facility.

F. *Wet and Winter Conditions:* Placement of the growing medium will not be allowed when the ground is frozen or saturated or when the weather is determined to be too wet.

A.4.6 Watering, Fertilizing, and Mulching

A. Water all plants during establishment to maintain all plantings in a healthy thriving condition.

B. Fertilizers should generally be avoided in stormwater management facilities. Fertilize all plants during establishment as needed with slow release, organic (low yield) material.

C. The purpose of mulching soils is to conserve moisture, hold plantings and topsoil in place, limit weed establishment and moderate soil temperatures.

D. Mulch for Vegetated Stormwater Management Facilities: The use of mulch in frequently inundated areas shall be limited, to avoid any possible water quality impacts including the leaching of tannins and nutrients, and the migration of mulch into waterways. Mulches to be used are a stable and inert (non-leaching) matter of sufficient mass and density that it will not float in standard flows. Mulch cover should be maintained throughout the life of the stormwater management facility with minimum thickness of 2 inches in depth.

A.5 Stormwater Management Facility Plant Lists

A.5.1 Selecting Plants

The plant lists provided in the following tables are separated by stormwater management facility type. Each facility list includes a suitability matrix for limiting contextual factors (such as moisture zones and width of facility) as well as a listing of specific characteristics for each species and the recommended on-center spacing. The species listed are representative examples and are not to be considered exclusive or exhaustive for these facility types. A comprehensive Native Plant Species List for planting within Oregon City can be found at the City's website. When a conflict exists between the representative species outlined within this publication and the Native Plant Species List, the Native Plant List will prevail.

An alternate plant selection may be allowed if proposed by a landscape architect or certified arborist.

No species adopted within the Oregon City Nuisance Plant List will be permitted.

The Native Plant List contains several native plants that are suggested as suitable for planting in and around stormwater management facilities. Select plant species suited to the expected hydrological conditions. Consider the maximum depth and duration of inundation, duration of saturation. Also, consider whether the site will dry out completely in the summer. The list includes the typical range of hydrological conditions under which the plants normally grow.

The following characteristics are included in plant matrices to aid in plant selection:

- **Botanical name, Common Name:** Plants are listed by their botanical name first, in italics, followed by a generally accepted common name. Note that common names vary, so use of the botanical name is recommended to ensure proper plant selection.
- **Zone:** Denotes the planting moisture zone as noted in the facility diagrams in **Figure A-1.** Some plants work in multiple moisture zones, and others only in a particular dry, moist, or wet condition.
- **Origin:** As described in **Section A.2.1**, the distinction between Northwest native plants, cultivated varieties of Northwest Natives, and plants that are non-native but adapted to our specific climate.
- **Type/Size**: A range of factors to aid in plant selection showing individual plant characteristics:
  - *(E)vergreen/(D)ecidious:* Identifies the characteristic of a plant to keep foliage during winter months. Planting placement and selection should maintain a balance of evergreen and deciduous materials.
  - *Potential Height:* Maximum size at maturity to use as a design guideline.
  - *On-Center Spacing:* Optimum spacing for new plantings. This is to be used as a guideline and may vary slightly depending on site conditions.
- Context Factors
  - *Facilities less than 3 feet wide:* Narrow conditions require plants that are not too large and will outgrow or have potential for roots to damage narrow planters.
  - *Fully Lined Facility:* Limit larger material or plants with aggressive roots
  - *Parking Area:* Use plant materials that do not limit necessary line of sight visibility.
  - *Streets:* Use plant materials that do not limit necessary line of sight visibility.
  - *Adjacent to Buildings:* Limit plants that are too large for areas next to buildings and would not be compatible with building footings, windows or other systems.

TABLE A-1: Representative Plant Lists: Stormwater Planters (Infiltration and Filtration)

Stormwater Planters (infiltration and filtration)		Zone	Origin			Type/Size			Context Factors					
Plant Name ***Botanical*, Common**	*Photo*	Moisture zone (A) Uniformly wet to moist	NW native	NW native cultivar	Non-native adapted	(E)vergreen /(D)eciduous	Potential height	Typical on center spacing	Facilities < 3 feet wide	Fully-lined facility	Parking areas	Streets	Adjacent to buildings	In buffer area
Herbaceous Plants														
Carex densa, Dense sedge		•	•			E	24"	12"	•	•	•	•	•	•
Carex rupestris, Curly sedge	x	•			•	D	14"	12"	•	•	•	•	•	
Carex testacea, New Zealand orange sedge		•			•	E	24"	12"	•	•	•	•	•	
Eleocharis ovata, Ovate spike rush		•	•			E	30"	12"	•	•	•	•	•	•
Juncus ensifolius, Dagger-leaf rush		•			•	D	10"	12"	•	•	•	•	•	
Juncus patens, Spreading rush	x	•	•			E	36"	12"	•	•	•	•	•	•
Shrubs/Groundcover														
Cornus sericea, Red twig dogwood		•	•			D	6'	4'			•		•	•
Cornus sericea 'Kelseyi', Kelsey dogwood		•		•		D	24"	24"	•	•	•	•	•	
Mahonia aquifolium, Oregon grape		•	•			E	5'	3'		•	•	•	•	•
Fragaria chiloensis, Coastal strawberry		•	•			E	6"	12"	•	•	•	•	•	•
Physocarpus capitatus, Pacific ninebark		•	•			D	10'	3'		•				•
Polystichum munitum, Sword fern	x	•	•			E	2'	2'	•	•	•	•	•	•
Rosa pisocarpa, Swamp rose		•	•			D	8'	3'		•			•	•
Large Shrubs/Small Trees														
Rubus spectabilis, Salmonberry		•	•			D	10'	4'		•			•	•
Salix lucida var. 'Lasiandra', Pacific willow		•		•		D	13'	6'						
Salix purpurea nana, Blue arctic willow		•			•	D	8'	6'			•			
Salix sitchensis, Sitka willow		•	•			D	20'	6'						•
Spirea douglasii, Douglas spiraea		•	•			D	7'	4'		•			•	•
Viburnum edule, Highbush cranberry		•	•			D	6'	4'		•	•	•		•
Trees														
Acer circinatum, Vine maple		•	•			D	15'	10'	•	•	•		•	•
Acer rubrum, Red maple		•			•	D	40'	25'		•	•	•		
Alnus rubra, Red alder		•	•			D	80'	15'			•			•
Crataegus douglasii, Black hawthorn		•	•			D	40'	10'		•	•			•
Fraxinus latifolia, Oregon ash		•	•			D	30'	20'			•			•
Malus fusca, Pacific crabapple		•	•			D	30'	10'	•	•	•			•
Nyssa sylvatica, Black tupelo		•			•	D	25'	20'			•	•		
Salix hookeriana, Hooker's willow		•	•			D	15'	10'			•			•
Thuja plicata, Western red cedar		•	•			E	150'	25'			•			•

TABLE A-2: Representative Plant Lists: Rain Gardens and Swales (Infiltration and Filtration)

Rain Gardens and Swales (infiltration and filtration)	Zone		Origin				Type/Size		Context Factors					
Plant Name ***Botanical*, common**	Moisture zone (A) Uniformly wet to moist	Moisture zone (B) Drier transitional area	NW native	NW native cultivar	Non-native adapted	Evergreen/Deciduous	Potential height	Typical on center spacing	Facilities < 3 feet wide	Fully-lined facility	Parking areas	Streets	Adjacent to buildings	In buffer area
Herbaceous Plants														
Carex obnupta, Slough sedge	•		•			E	48"	12"		•	•	•	•	•
Carex testacea, New Zealand orange sedge	•				•	D	24"	12"		•	•	•	•	
Deschampsia cespitosa, Tufted hair grass	•		•			D	36"	12"	•	•	•	•	•	•
Elymus glaucus, Blue wild rye	•	•	•			E	24"	12"	•	•	•	•	•	•
Juncus ensifolius, Dagger-leaf rush	•				•	D	10"	12"	•	•	•	•	•	
Juncus patens, Spreading rush	•	•			•	E	36"	12"	•	•	•	•	•	
Scirpus microcarpus, Small fruited bulrush	•		•			E	24"	12"	•	•	•	•	•	•
Small Shrubs/Groundcover														
Arctostaphylos uva-ursi, Kinnickinnick		•	•			E	6"	12"	•	•	•	•	•	•
Cornus sericea 'Kelseyi', Kelsey dogwood	•	•		•		D	2'	12"	•	•	•	•	•	
Fragaria chiloensis, Coastal strawberry		•	•			E	6"	12"	•	•	•	•	•	•
Mahonia aquifolium, Oregon grape	•	•	•			E	5'	3'		•	•	•	•	•
Physocarpus capitatus, Pacific ninebark	•		•			D	6'	3'		•				•
Polystichum munitum, Sword fern	•	•	•			E	2'	2'	•	•	•	•	•	•
Spirea betulifolia, Birchleaf spiraea	•	•	•			D	2'	2'	•	•	•	•	•	•
Symphoricarpus alba, Snowberry	•	•	•			D	3'	3'	•	•	•	•	•	•
Large Shrubs/Small Trees														
Cornus sericea, Red-Twig dogwood	•	•	•			D	6'	4'						•
Holodiscus discolor, Western serviceberry	•	•	•			D	6'	4'		•	•	•		•
Rosa nutkana, Nootka rose	•	•	•			D	8'	4'		•		•		•
Omleria cerasiformis, Indian plum	•		•			D	6'	4'		•	•	•		•
Ribes sanguimeum, Red flowering currant	•	•	•			D	8'	4'		•	•	•	•	•
Salix sitchensis, Sitka willow	•		•			D	15'	5'						•
Spirea douglasii, Douglas spiraea		•	•			D	7'	4'		•	•	•	•	•
Trees														
Acer circinatum, Vine maple	•	•	•			D	15'	8'	•	•	•	•	•	•
Alnus rubra, Red alder	•	•	•			D	80'	20'					•	•
Cornus nuttalii, Pacific dogwood	•	•	•			D	20'	10'	•	•	•	•	•	•
Fraxinus latifolia, Oregon ash	•		•			D	30'	25'						•
Malus fusca, Pacific crabapple	•		•			D	30'	10'	•	•			•	•
Pseudotsuga menziesii, Douglas fir	•	•	•			E	200'	30'						•
Thuja plicata, Western red cedar	•	•	•			E	150'	20'			•			•

TABLE A-3: Representative Plant Lists: Ponds

Ponds	Zone			Origin				Type/Size		Context Factors					
Plant Name ***Botanical*, common**	Moisture zone (S) Saturated/permanent pool	Moisture zone (A) Uniformly wet to moist	Moisture Zone (B) Drier transitional area	NW native	NW native cultivar	Non-native adapted	(E)vergreen/(D)eciduous	Potential height	Typical on center spacing	Facilities < 3 feet wide	Fully -lined facility	Parking areas	Streets	Adjacent to buildings	In buffer area
Herbaceous Plants															
Alisma plantago-aquatica, Water plantain	•			•			D	24"	12"	•	•				•
Camassia quamash, Camas lily		•	•	•			D	24"	12"	•	•	•	•	•	•
Carex obnupta, Slough sedge	•	•		•			E	48"	12"		•	•	•	•	•
Deschampsia cespitosa, Tufted hair grass		•		•			D	36"	12"	•	•	•	•	•	•
Eleocharis ovata, Ovate spike rush	•			•			E	30"	12"	•	•				•
Elymus glaucus, Blue wild rye		•	•	•			E	24"	12"	•	•	•	•	•	•
Juncus ensifolius, Dagger-leaf rush	•	•				•	D	10"	12"	•	•	•	•	•	
Juncus patens, Spreading rush	•	•	•			•	E	36"	12"	•	•	•	•	•	
Sagittaria latifolia, Wapato	•			•			D	24"	12"	•	•				•
Scirpus acutus, Hardstem bulrush	•					•	D	10"	12"	•	•				
Scirpus microcarpus, Small fruited bulrush	•	•		•			E	24"	12"	•	•	•	•	•	•
Veronica liwanensis, Speedwell		•				•	D	2"	12"	•	•	•	•	•	
Small Shrubs/Groundcover															
Cornus sericea 'Kelseyi', Kelsey dogwood	•	•	•		•		D	2'	1'	•	•	•	•	•	•
Mahonia aquifolium, Oregon grape		•	•	•			E	5'	3'		•	•	•	•	•
Physocarpus capitatus, Pacific ninebark	•	•		•			D	6'	3'		•				•
Polystichum munitum, Sword fern		•	•	•			E	2'	2'	•	•	•	•	•	•
Spirea betulifolia, Birchleaf spiraea		•	•	•			D	2'	2'	•	•	•	•	•	•
Smphoricarpus alba, Snowberry		•	•	•			D	3'	3'	•	•	•	•	•	•
Large Shrubs/Small Trees															
Cornus sericea, Red-Twig Dogwood	•	•	•	•			D	6'	4'						•
Holodiscus discolor, Western serviceberry		•	•	•			D	6'	4'		•	•	•		•
Rosa nutkana, Nootka rose		•	•	•			D	8'	4'		•		•		•
Omleria cerasiformis, Indian plum		•		•			D	6'	4'		•	•	•		•
Ribes sanguimeum, Red flowering currant		•	•	•			D	8'	4'		•	•	•	•	•
Salix sitchensis, Sitka willow	•	•		•			D	15'	5'						•
Spirea douglasii, Douglas Spiraea			•	•			D	7'	4'		•	•	•	•	•
Ceanothus velutinus, Snowbrush		•	•	•			E	6'	3'		•	•	•	•	•

TABLE A-3: Representative Plant Lists: Ponds

Ponds	Zone			Origin				Type/Size		Context Factors					
Plant Name ***Botanical*, common**	Moisture zone (S) Saturated/permanent pool	Moisture zone (A) Uniformly wet to moist	Moisture Zone (B) Drier transitional area	NW native	NW native cultivar	Non-native adapted	(E)vergreen/(D)eciduous	Potential height	Typical on center spacing	Facilities < 3 feet wide	Fully -lined facility	Parking areas	Streets	Adjacent to buildings	In buffer area
Trees															
Acer circinatum, Vine maple		•	•	•			D	15'	8'	•	•	•	•	•	•
Acer rubrum, Red Maple	•	•	•			•	D	40'	25'		•	•	•		
Alnus rubra, Red alder	•			•			D	80'	20'					•	•
Cornus nuttalii, Pacific Dogwood		•	•	•			D	20'	10'	•	•	•	•	•	•
Fraxinus latifolia, Oregon Ash	•	•		•			D	30'	25'						•
Malus fusca, Pacific Crabapple	•	•		•			D	30'	10'	•	•			•	•
Pseudotsuga menziesii, Douglas fir		•	•	•			E	200'	30'						•
Thuja plicata, Western red cedar	•	•	•	•			E	150'	20'			•			•

TABLE A-4: Representative Plant Lists: Green Roofs

Green Roofs	Zone		Origin				Type/Size	
Plant Name ***Botanical*, common**	Moisture Zone (C) Extensive Ecoroof	Moisture zone (D) Intensive Roof Garden	NW native	NW native cultivar	Non-native adapted	(E)vergreen/(D)eciduous	Potential height	Typical on center spacing
Sedums and Succulents								
Delosperma ssp., Ice plant	•	•			•	E	4"	6-12"
Malephora crocea v. purpureo, Coppery mesemb	•	•			•	E	10"	6-12"
Sedum acre, Biting stonecrop	•				•	E	2"	6-12"
Sedum album, White stonecrop	•				•	E	3"	6-12"
Sedum divergens, Pacific stonecrop	•				•	E	3"	6-12"
Sedum hispanicum, Spanish stonecrop	•				•	E	3"	6-12"
Sedum kamtschaticum, Kirin-so	•	•			•	D	6"	6-12"
Sedum oreganum, Oregon stonecrop	•	•	•			E	4"	6-12"
Sedum sexangulare, Tasteless stonecrop	•	•			•	E	4"	6-12"
Sedum spathufolium, Stonecrop	•	•			•	E	4"	6-12"
Sedum spurium, Two-row stonecrop	•	•			•	E	6"	6-12"
Sempervivum tectorum, Hens and chicks	•				•	E	3"	6-12"
Herbaceous Plants								
Achillea millefolium, Common yarrow	•	•			•	D	24"	24"
Artemesia 'Silver Mound', Artemesia	•	•			•	D	12"	12"
Castilleja foliosa, Indian paintbrush	•	•	•			D	10"	12"
Dianthus ssp., Dianthus	•				•	D	12"	12"
Erigeron discoideus, Fleabane	•				•	D	12"	12"
Festuca glauca 'Elijah's Blue', Elijah's blue fescue	•	•			•	E	12"	12"
Fragaria chiloensis, Coastal strawberry	•	•	•			E	6"	12"
Gilia capitata, Blue thimble flower	•		•			D	12"	12"
Lobularia maritima, Sweet alyssum	•				•	D	12"	12"
Polystichum munitum, Sword fern	•	•	•			E	24"	24"
Thymus serphyllum, Creeping thyme	•				•	D	3"	6"
Veronica liwanensis, Speedwell	•				•	D	2"	6"

PLANT DIAGRAM AND LEGEND 1

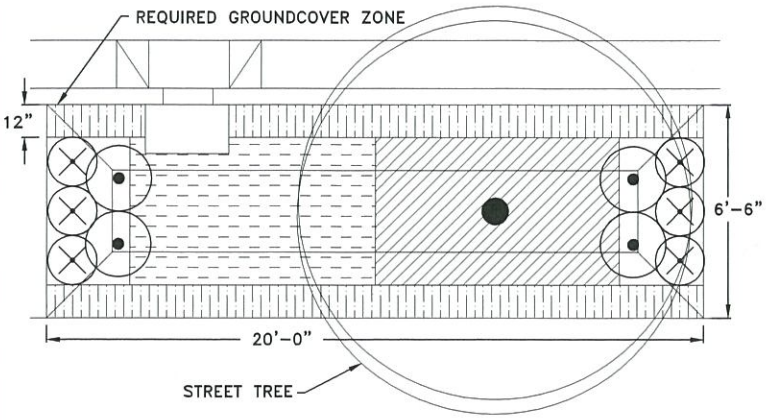

Symbol	Botanical name COMMON NAME	E/D	O.C.	QTY
ZONE A				
	Carex rupestris CURLY SEDGE	E	12"	32
	Juncus patens SPREADING RUSH	E	12"	33
	Spirea douglasii DOUGLAS SPIRAEA	D	24"	4
ZONE B				
	Fragaria chiloensis COASTAL STRAWBERRY	E	12"	37
	Mahonia aquifolium OREGON GRAPE	E	18"	6

PLANT DIAGRAM AND LEGEND 2

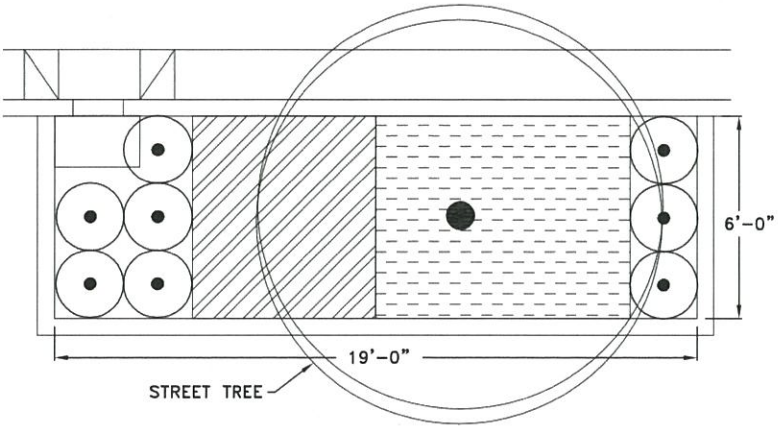

Symbol	Botanical name COMMON NAME	E/D	O.C.	QTY
	Carex ruperstris CURLY SEDGE	E	12"	45
	Juncus ensifolius DAGGER-LEAF RUSH	D	12"	33
	Cornus sericea 'Kelseyi' KELSEY DOGWOOD	D	24"	8

PLANT DIAGRAM AND LEGEND 3

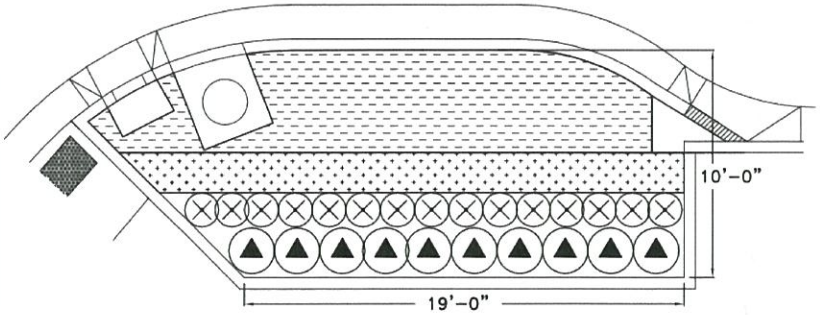

Symbol	Botanical name COMMON NAME	E/D	O.C.	QTY
	Carex rupestris CURLY SEDGE	E	12"	82
	Carex densa DENSE SEDGE	E	12"	42
	Mahonia aquifolium OREGON GRAPE	E	18"	15
	Rosa pisocarpa SWAMP ROSE	D	24"	10

DESIGN GUIDELINES

1. These are example planting diagrams provided by the City of Oregon City. Choose a planting diagram and alter it to your design. Other planting designs may be approved.
2. See Table A-1 for typical plant spacing and design considerations.
3. Planting legends shown here do not include all required information for landscape plans.

Example Planting Diagram
Figure A-1

OREGON CITY
STORMWATER AND GRADING DESIGN STANDARDS

Stormwater and Grading Design Standards

APPENDIX B

Site Assessment and Planning Checklist

SITE ASSESSMENT AND PRELIMINARY DESIGN CHECKLIST		
✓	**Information needed**	**Attach supporting materials as needed**
2.2.1 Site Information		
	Applicant contact information	Applicant name: _____ Business name: _____ Contact address, phone number, and e-mail: _____ _____ _____
	Project location	Site address: _____ Site description: _____ _____ _____ Major drainage basin: _____ Is the project site located with the NROD as defined in OCMC 17.49? _____ (Y/N) *Include a vicinity map of the site (including location of property in relation to adjacent properties, roads, and pedestrian/bike facilities).*
	Project type	Identify types of development planned for the site such as commercial, industrial, single-family residential, multi-family residential, or other (describe):
	Size of site	Size of site: _____ (acres) Number of existing/proposed tax lots: _____ Amount of new and replaced impervious area: _____ (SF)
2.2.2 Site Assessment *Note: Site assessment information may be available from the OCMaps online tool available through the City's website.*		
	Site Assessment Map	*Attach engineered scale Site Assessment Map, showing items below.*
	Topography Evaluate site and map slopes: *Flat: 0-10%* *Moderate: 10-25%* *Steep: 25% and greater*	*Surveyed or aerial-based mapping with 2-foot intervals for slopes 0-25% slope and 10-foot intervals for steeper.* Is the project site located within a *Geologic Hazard Areas*? _____ (Y/N) *Indicate Geologic Hazard Areas as defined by OCMC 17.04.510 and Geologic Hazards Overlay Zone as defined by OCMC 17.04.515.*
	Soils and Groundwater Research and map site soil hydrologic group & areas of high groundwater	NRCS Hydrologic Soil Type (show on map if more than one type present): *Attach seasonal groundwater depth evaluation if available or required (for site with floodplain and/or wetland). Groundwater depth information is available from* NRCS.
	Infiltration Assessment Determine soil capacity for onsite infiltration	If an infiltration test is performed, attach the documentation. Report the test type (Basic/Professional) performed and results. See **Appendix D** for the approved infiltration testing methods. Test type: _____ _____ (inches/hour)

SITE ASSESSMENT AND PRELIMINARY DESIGN CHECKLIST		
	Hydrology – Conditions and Natural Features Map site floodplains, wetlands, streams, and location of outfalls	Clearly label on map all intermittent and perennial creeks/streams/rivers and wetlands, FEMA floodplains, and existing drainage systems (pipes, ditches, outfalls). Check here if present on site: _____ Sensitive area(s) _____ Floodplain _____
	Downstream Conveyance	Indicate the proposed point of discharge on the site plan. *Prepare and attach a Downstream Analysis as required by **Chapter 5**.* Check here to verify that adequate downstream capacity is available: _____
	Existing Vegetation Map trees and vegetation	Using aerial photos or survey, map all trees and vegetation. Note all existing trees 6-inch caliper and greater (DBH) on map. Delineate and identify other areas and types of existing vegetation. The local planning authority may require a formal tree survey.
	Required Vegetated Buffers and Setbacks Assess and map buffers	Identify required vegetated buffer areas and other setback limits as defined by OCMC Title 17.
	Land Use and Zoning	Existing Land Use Zoning designation(s): _____
	Access and Parking	Delineate proposed access points for all transportation modes on map. Indicate amount and area of required parking onsite if applicable, *attach documentation as needed.*
	Utilities to Site and Surrounding Area	Map existing utilities including stormwater facilities, storm conveyance, sewer, water, electricity, phone/cable, gas, and any public storm system/facility downstream.
2.2.3 Site Preliminary Design Objectives *(attach engineered scale Preliminary Site Plan)*		
	1. Preserve existing resources	**Required:** Show sensitive areas and buffers on site plan. Denote buffer areas that require enhancement. Show any proposed areas of encroachment and associated buffer mitigation areas.
	2. Minimize site disturbance	**Required:** Delineate protection areas on site plan for areas to remain undisturbed during construction.
	3. Minimize soil compaction	**Required:** Delineate and note temporary fencing on site plan for proposed infiltration facilities, vegetated stormwater management facilities, and re-vegetation areas.
	4. Minimize imperviousness	**Required:** Delineate proposed impervious areas and proposed impervious area reduction methods on the site plan. A. Total proposed new/replaced impervious area: _____ (SF) B. Area of proposed Green Roofs: _____ (SF) C. Area of proposed pervious pavements: _____ (SF) D. Describe type of pavers or pavement proposed: _____ _____ E. Impervious area requiring management [A-(B+C)]: _____ (SF)

SITE ASSESSMENT AND PRELIMINARY DESIGN CHECKLIST		
2.2.4 Proposed Stormwater Management Strategy		
	Proposed Stormwater Management Strategy	**Level 1 – Onsite retention of the 10-year design storm** _____ Full onsite retention/infiltration using LID facilities where there are infiltration rates of 2.0 inches per hour or greater (choose one or more applicable strategies from the next section): **Level 2 – Onsite stormwater management using LID facilities** *(include documentation for the following applicable limiting condition(s) and choose one or more applicable strategies from the next section):* _____ Low infiltration rates of less than 2.0 inches per hour _____ Location for stormwater management facilities limited to areas with fill _____ Steep slopes _____ High groundwater _____ Contaminated soils _____ Conflict with required Source Controls (**Chapter 6**) _____ **Level 3 - Offsite stormwater management facilities/regional facilities** _____ **Level 4 - Fee in Lieu, as determined by the City**
	Preliminary Facility Selection	Check all that apply, *attach output from BMP Sizing Tool*, and show proposed Stormwater Management Facilities on Preliminary Site Plan. LID facilities: _____ Stormwater Planter (infiltration or filtration) _____ Rain Garden (infiltration or filtration) _____ Vegetated Swale (infiltration or filtration) _____ Detention Pond (infiltration or filtration) _____ Other* _____ **Modifications must be approved by City per Section 1.6*
	Minimum Facility Size	A. Level 1 - Required surface area of onsite surface infiltration facilities: As determined by BMP sizing tool or engineered method: _____ (SF) OR storm facility which can infiltrate the full 10-year design storm: _____ (SF) B. Level 2 - Calculate required surface area of onsite LID facilities: As determined by BMP sizing tool or engineered method: _____ (SF) *OR 10% of total impervious area (new and replaced): _____ (SF) C. Level 3 - Calculate required surface area of offsite/regional facilities: As determined by BMP sizing tool or engineered method: _____ (SF) D. Level 4 - Fee in Lieu, as determined by the City _____ **10 % sizing factor only applicable for sites entirely within a Geologic Hazard Area (Section 2.2.4)*

SITE ASSESSMENT AND PRELIMINARY DESIGN CHECKLIST		
2.2.5	**Other Project Requirements**	
	Grading Permit	A city-issued grading permit shall be required before the commencement of any of the following filling or grading activities (Review OCMC 15.48 for requirements): Grading activities in excess of ten cubic yards of earth. _____ (Y/N) Grading activities divert existing drainage courses, (natural or man-made). _____ (Y/N) Creation of impervious surfaces greater than two thousand square feet. _____ (Y/N) Excavation beyond the limits of a basement or footing excavation, having an unsupported soil height greater than five feet after the completion of such a structure. _____ (Y/N) Grading activities involving the clearing or disturbance of one-half acre or more. _____ (Y/N) *Fill and grading activities proposed to be undertaken in conjunction with a land use application, do not require a separate grading permit but are subject to the standards OCMC 15.48 and Chapter 3 of the Stormwater and Grading Design Standards. Approval of the construction plans submitted through the land use application process shall fulfill grading permit requirements.*
	Erosion Prevention and Sediment Control	Identify the required permits: _____ ESC Permit from the City *(sites that include 1,000+ SF new or replaced impervious area)* _____ 1200-C Permit from DEQ *(sites that disturb 1 acre or more land surface)*
	Source Control for High Use Sites	Identify whether the proposed development will include any of the following: _____ Fuel Dispensing Facilities and Surrounding Traffic Areas _____ Above-Ground Storage of Liquid Materials _____ Solid Waste Storage Areas, Containers, and Trash Compactors _____ Exterior Storage of Bulk Materials _____ Material Transfer Areas/Loading Docks _____ Equipment and/or Vehicle Washing Facilities _____ Development on Land With Suspected or Known Contamination _____ Covered Vehicle Parking Areas _____ Industrial and Commercial High Traffic Areas _____ Other land uses subject to the ODEQ 1200-Z Industrial Stormwater Permit
	Other Permits	Identify other natural resources related permits from local, state, or federal agencies that may be required as part of the proposed development activity. It is the responsibility of the applicant to identify and obtain required permits prior to project approval. List other anticipated permits:

Stormwater and Grading Design Standards

APPENDIX C

Stormwater Facility Design and Maintenance

APPENDIX C. STORMWATER FACILITY DESIGN AND MAINTENANCE

This appendix includes fact sheets, design guideline drawings, and operation and maintenance (O&M) plans for the stormwater management facilities accepted by the City of Oregon City (City). Fact sheets include example photos and concept sketches to illustrate the general appearance and potential use for the stormwater management facilities. The images have been excerpted from the 2009 Clean Water Services LIDA Handbook and are intended to help in the selection of appropriate facilities for preliminary site design.

The facility drawings show minimum facility dimensions, cross sections, and design criteria. These drawings are for reference only. The project engineer must provide facility-specific construction documents with plan views, cross sections, and control structure details for each proposed stormwater management facility. Refer to the City's standard drawings and engineering policy for standard details, applicable for use in construction documents.

This appendix also includes sample O&M plans for typical stormwater management facilities. The O&M plans should be modified as necessary to reflect specific site conditions and facility design before inclusion in the stormwater management plan.

The following figures are included in this appendix:

- Figure C-1. Stormwater Planter – Filtration
- Figure C-2. Stormwater Planter – Infiltration
- Figure C-3. Stormwater Planter O&M Plan
- Figure C-4. Rain Garden – Filtration
- Figure C-5. Rain Garden – Infiltration
- Figure C-6. Rain Garden O&M Plan
- Figure C-7. Vegetated Swale – Filtration
- Figure C-8. Vegetated Swale – Infiltration
- Figure C-9. Vegetated Swale O&M Plan
- Figure C-10. Planter, Rain Garden, and Swale Flow Control Structure
- Figure C-11. Detention Pond
- Figure C-12. Detention Pond Flow Control Structure
- Figure C-13. Detention Pond O&M Plan
- Figure C-14. Underground Infiltration System
- Figure C-15. Underground Infiltration System O&M Plan
- Figure C-16. Pervious Pavement
- Figure C-17. Pervious Pavement O&M Plan
- Figure C-18. Green Roof
- Figure C-19. Green Roof O&M Plan
- Figure C-20. Stormwater Facilities O&M Checklist

Rain Gardens and Stormwater Planters

Rain gardens and Stormwater Planters have similar design guidelines and potential benefits. Stormwater Planters are rain gardens with vertical walls, which may be more appropriate in urban site design or for facilities located adjacent to sidewalks, roadways, or buildings.

RAIN GARDENS

Rain gardens are planted open depressions designed to accept runoff from adjacent impervious surfaces. Rain gardens trap and treat pollutants by filtering it through topsoil as the water infiltrates into native soils or underlying drain pipes. Most rain gardens must be designed to infiltrate the stormwater they receive. An underdrain and overflow device may be required to accomodate flows greater that the infiltration capacity of the underlying soils, or if a liner is required.

Benefits

- Rain gardens may help fulfill a site's landscaping area requirement and can be used to treat stormwater from all types of impervious surfaces including private property and the public right-of-way, rooftops, parking lots, and streets.
- Rain gardens reduce stormwater flow rates, volume, and temperature, and improve water quality. Pollutants are removed as the runoff passes through the soil layer and is collected in an underlying layer of gravel or drain rock.
- Detention storage volume can be built into the underlying drain rock layer.

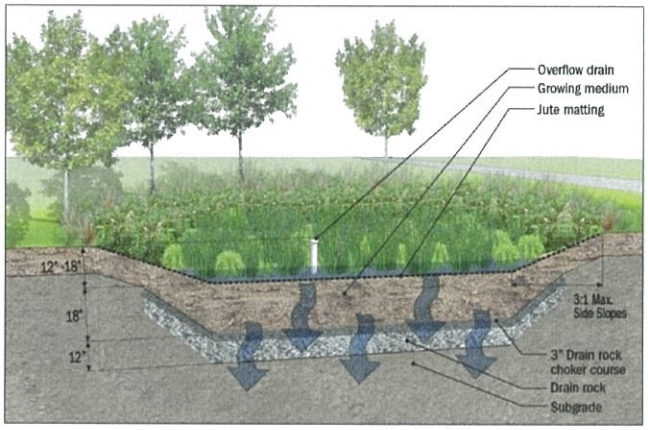

Image from Clean Water Services LIDA Handbook

Buckman Terrace Apartments, Portland

Beaumont Village Lofts, NE Portland

Vegetated Swales

Vegetated Swales function similar to rain gardens, but include a sloped bottom to allow transport of stormwater runoff to a downstream outlet. In this way, vegetated swales can be utilized for stormwater treatment and conveyance.

VEGETATED SWALES

A vegetated swale is a gently sloping landscaped depression that collects and conveys stormwater runoff. The densely planted swale filters stormwater as it flows the length of the swale and allows infiltration of water through topsoil and into the ground. The vegetated swale may discharge to a storm sewer or other approved discharge point where soils do not drain well, or if liner is required.

Benefits

- Vegetated swales may help fulfill a site's landscaping area requirement and can be used to treat stormwater from all types of impervious surfaces including private property and the public right-of-way, rooftops, parking lots, and streets.
- Vegetated swales reduce stormwater flow rates, volume, and temperature, and improve water quality. Pollutants are removed as the runoff passes through the vegetation and soil layer and is collected in an underlying layer of gravel or drain rock.
- Where soils do not drain well, swales can overflow to an approved discharge point.

Image from Clean Water Services LIDA Handbook

New Seasons, SE Division St, Portland

Boeckman Road, Wilsonville

Detention Ponds

The principles of detention pond design are the same as those for constructed wet ponds presented in this example from Clean Water Services. The flow control structure should the design principles from the BMP Sizing Tool (See facility design details in Appendix C for more information).

CONSTRUCTED WET PONDS

A constructed wet pond is a landscaped depression that collects and holds stormwater runoff and allows pollutants to settle and filter out during storm events. Constructed wet ponds have a permanent pool of water and also an extended detention area above that fills during storm events and releases water slowly over a number of hours. The permanent pool is sized to reduce pollution by settling and biological processes. The extended detention area is sized to meet flow control requirements.

Benefits

- Constructed Wet Ponds can be used to treat stormwater from all types of impervious surfaces including private property and the public right-of-way, rooftops, parking lots, and streets.
- Constructed Wet Ponds reduce stormwater flow rates, volume, and temperature, and improve water quality. Pollutants are removed through settling and biofiltration through vegetation and soils.
- Constructed Wet Ponds can be designed as multi purpose site amenities and can significantly contribute to urban habitat for birds and other organisms.
- Detention storage volume can be included in wetland sizing, or a detention pond can be designed for detention only without a permanent pool, if water quality requirements are met separately on site.

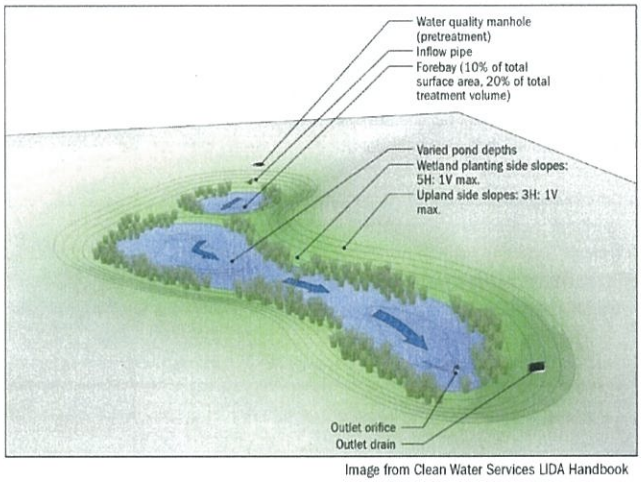

Image from Clean Water Services LIDA Handbook

Washington County

Porous Pavement

Porous pavement is a water permeable structural groundcover that infiltrates precipitation, attenuates stormwater runoff flows and volumes, and reduces temperatures. Porous pavement provides a stable load-bearing surface without increasing a project's total impervious area. The two main categories of porous pavements are 1) pervious concrete and 2) permeable pavers. Pervious concrete is poured in place and resembles its solid counterpart. Permeable pavers are solid, discrete units typically made of pre-cast concrete, brick, stone, or cobbles and set to allow water to flow between them.

Benefits

- The area of a porous pavement may be directly subtracted from site impervious area. Porous pavement reduce site impervious area, reducing the required size of stormwater facilities.
- Porous pavement reduces stormwater flow rates, volume, and temperatures by temporarily storing stormwater and allowing infiltration of stormwater into underlying soils.
- Detention storage volume may be built into the drain rock layer.

Porous Asphalt

Porous Pavers

Porous Pavers, Tigard Library

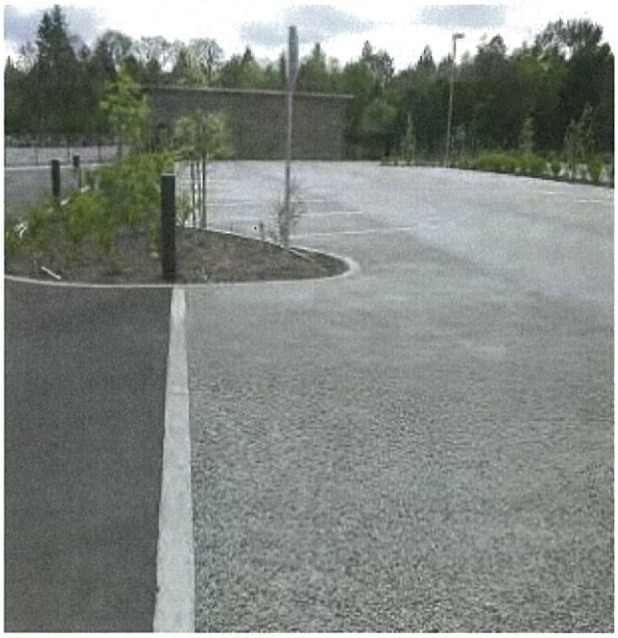

Porous Concrete, Clean Water Services Field Operations Center

Green Roofs

GREEN ROOFS

A green roof is a thin lightweight vegetated roof system used in place of a conventional roof. Greenroofs typically consist of a waterproof membrane, drainage material, a lightweight layer of soil, and a cover of plants. Species are chosen appropriate for a rooftop environment - dry and hot in summer, wet in winter. Extensive greenroofs are not intended to be accessed except for maintenance.

Benefits

Clean Water Services Field Operations

- Green roofs reduce site impervious area, reducing the required size of stormwater facilities. The area of a green roof may be directly subtracted from site impervious area in the District's Impervious Reduction Form.
- Green roofs can capture and retain 60% of annual precipitation.
- Green roofs reduce runoff flow rate, volume and temperature of roof runoff.
- Green roofs outlasts conventional roofs by twenty years or more. Average green roof lifespan is 40 years.
- Green roofs slow down peak flow rates during heavy storm events which helps prevent on-site erosion and flooding especially in urban areas where soils are heavily compacted and have a low infiltration rate.
- Green roofs filter air pollutants and absorb carbon dioxide.
- Green roofs reduce the heat island effect within an urban area by absorbing thermal UV rays from the sun.

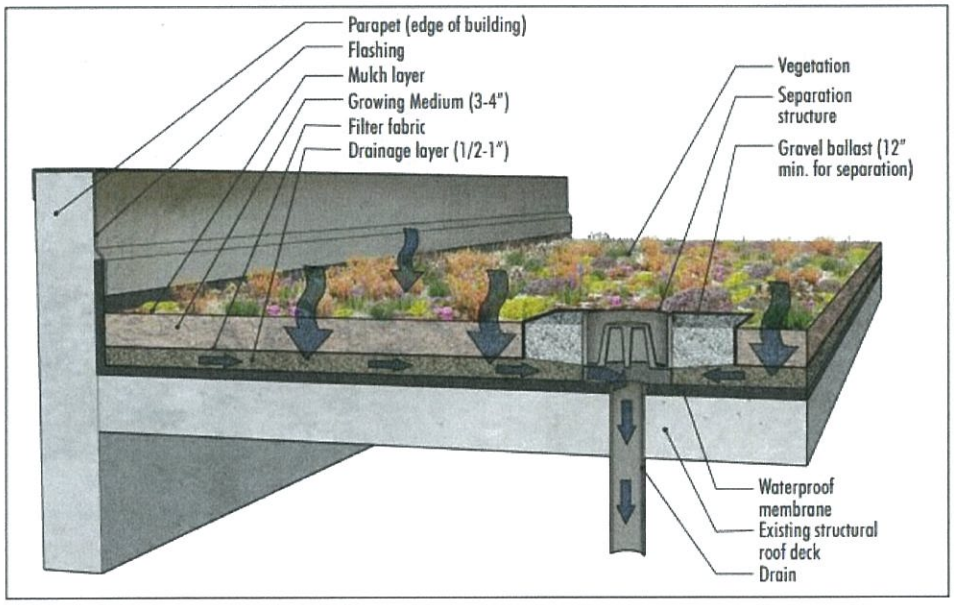

* SEE CITY'S STANDARD DRAWINGS FOR LOCATING PLANTERS IN THE PUBLIC RIGHT-OF-WAY.

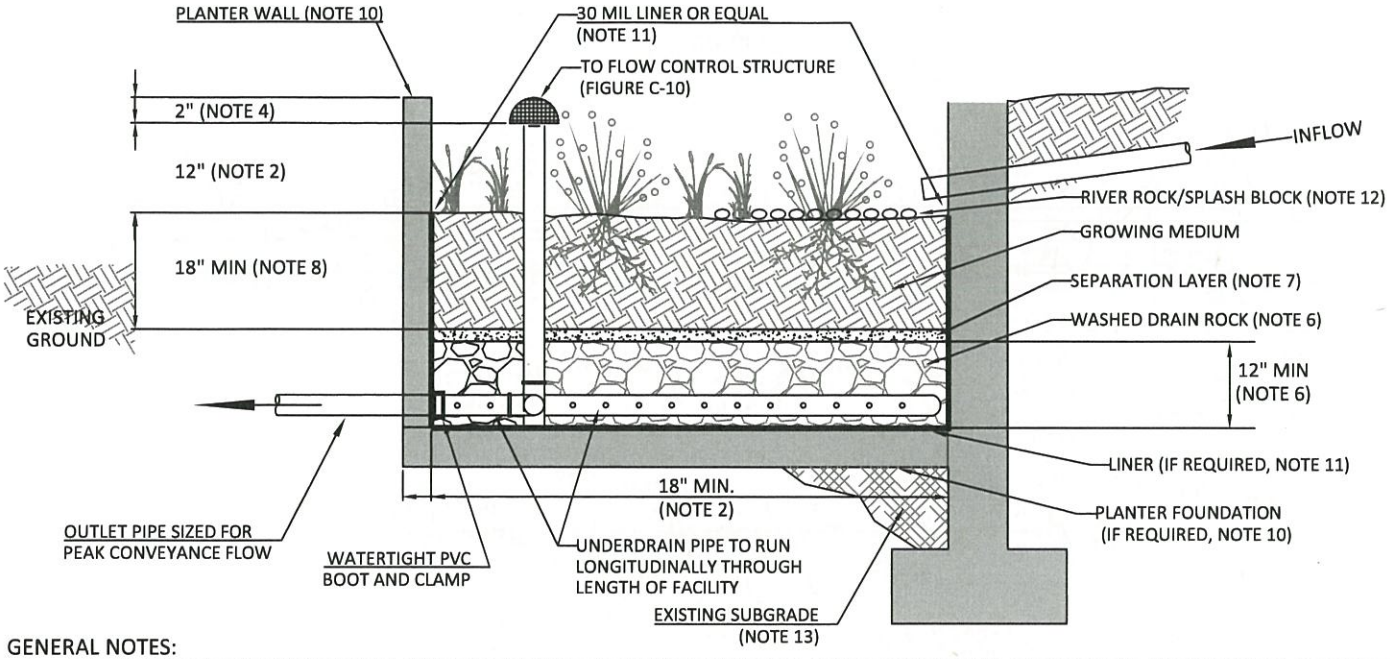

GENERAL NOTES:

1. **PROVIDE PROTECTION** FROM ALL VEHICLE TRAFFIC, EQUIPMENT STAGING, AND FOOT TRAFFIC IN PROPOSED INFILTRATION AREAS PRIOR TO, DURING AND AFTER CONSTRUCTION.
2. **DIMENSIONS:**
   -WIDTH: 18" MINIMUM
   -DEPTH OF PLANTER (FROM TOP OF GROWING MEDIUM TO OVERFLOW ELEVATION): 12"
   -SLOPE OF PLANTER: 0.5% OR LESS
3. **SETBACKS**
   -PLANTERS MUST BE MINIMUM OF 5 FEET FROM PROPERTY LINE.
4. **OVERFLOW:**
   -INLET ELEVATION MUST ALLOW FOR 2" OF FREEBOARD, MINIMUM. PROTECT FROM DEBRIS AND SEDIMENT WITH STRAINER OR GRATE.
   -IDENTIFY EMERGENCY OVERFLOW ROUTE ON THE STORMWATER MANAGEMENT PLAN.
5. **PIPING:**
   -PERFORATED UNDERDRAIN PIPING: SHALL BE ABS SCH. 40, DUCTILE IRON, OR PVC SCH.40, 6" MINIMUM DIAMETER. PIPING MUST HAVE 1% GRADE AND FOLLOW THE UNIFORM PLUMBING CODE. PVC NOT ALLOWED ABOVE GROUND.
   -OVERFLOW PIPING: SHALL BE ABS SCH.40, DUCTILE IRON, OR PVC SCH.40 AND SHALL NOT BE PERFORATED. MIMIMUM DIAMETER IS 6". PIPING MUST HAVE 1% GRADE AND FOLLOW THE UNIFORM PLUMBING CODE. PVC NOT ALLOWED ABOVE GROUND.
6. **DRAIN ROCK:**
   -SIZE FOR FLOW-THROUGH PLANTER: 1 1/2" - 3/4" WASHED
   -DEPTH: 12" MINIMUM
7. **SEPARATION** BETWEEN DRAIN ROCK AND GROWING MEDIUM: SHALL BE A 3" LAYER OF 3/4" - 1/4" OPEN GRADED AGGREGATE.
8. **GROWING MEDIUM:**
   -DEPTH: 18" MINIMUM
   -SEE APPENDIX A FOR SPECIFICATION OR USE SAND/LOAM/COMPOST 3-WAY MIX.
   -FACILITY SURFACE AREA MAY BE REDUCED BY 20% WHEN GROWING MEDIA DEPTH IS INCREASED TO 30" OR MORE.
9. **VEGETATION:** FOLLOW LANDSCAPE PLANS OR REFER TO PLANTING REQUIREMENTS IN APPENDIX A.
10. **PLANTER FOUNDATION AND WALLS:**
    -MATERIALS SHALL BE 4" REINFORCED CONCRETE, STONE, BRICK, OR OTHER DURABLE MATERIAL.
    -CONCRETE, BRICK, OR STONE WALLS SHALL BE INCLUDED ON FOUNDATION PLANS.
    -INSTALL INVERTED CURB AS NEEDED BETWEEN PLANTER AND ROAD SUBGRADE.
    -WALL HEIGHTS GREATER THAN 24" ABOVE GRADE REQUIRE HANDRAIL.
11. **WATERPROOF LINER (IF REQUIRED):**
    -LINER SHALL BE 30 MIL PVC OR EQUIVALENT, FOR FLOW THROUGH FACILITIES.
    -A WATERPROOF LINER IS NOT REQUIRED IF THE FOUNDATION OR WALL MATERIAL IS WATERPROOF REINFORCED CONCRETE OR APPROVED EQUAL.
12. **INSTALL RIVER ROCK** SPLASH PAD TO TRANSITION FROM INLET TO GROWING MEDIUM. SIZE OF ROCK SHALL BE 1" - 3".
13. **SEASONAL HIGH GROUNDWATER SEPARATION:**
    -SEPARATION DISTANCE AS REQUIRED BY THE CITY.
14. **SUBMIT RETAINING WALL DESIGN** IN ACCORDANCE WITH APPLICABLE STRUCTURAL CODES FOR REVIEW AND APPROVAL.

Stormwater Planter - Filtration
Figure C-1

OREGON CITY
STORMWATER AND GRADING DESIGN STANDARDS

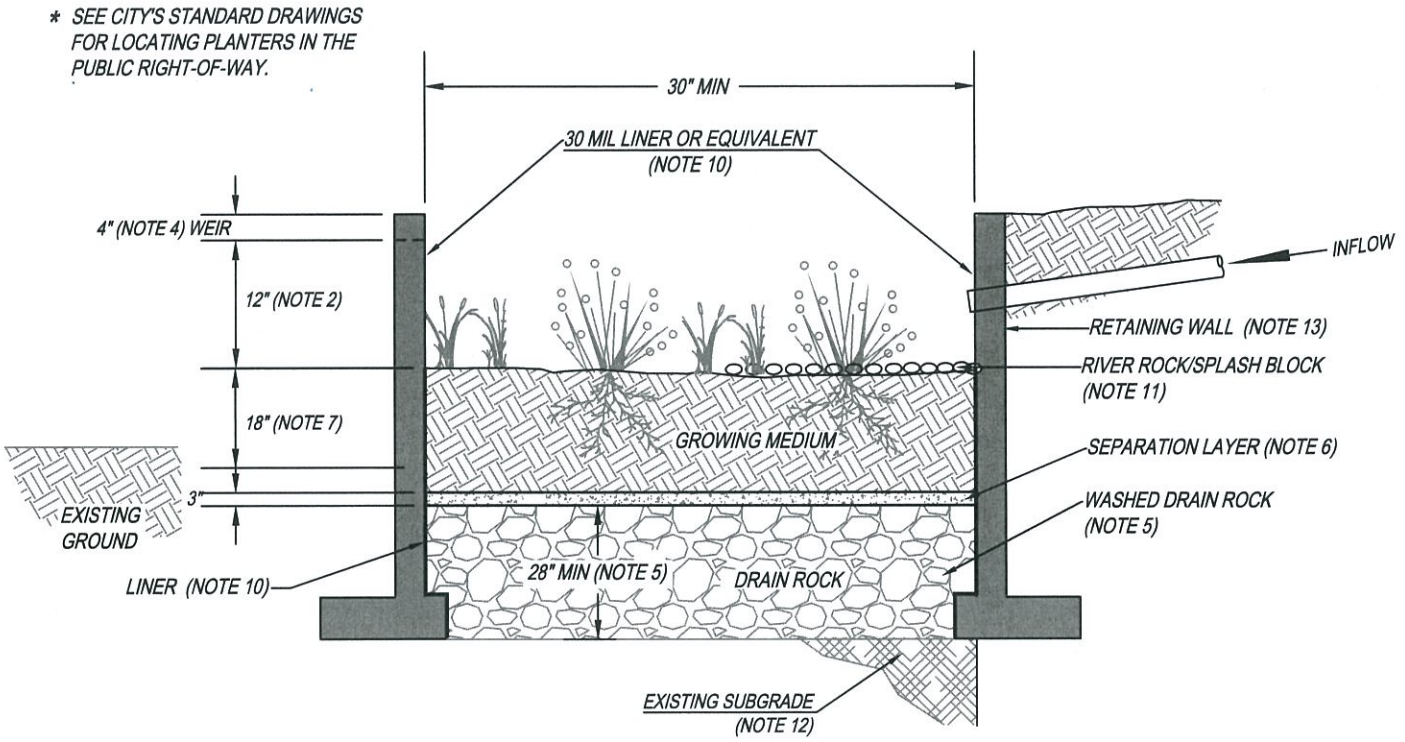

GENERAL NOTES:

1. **PROVIDE PROTECTION** FROM ALL VEHICLE TRAFFIC, EQUIPMENT STAGING, AND FOOT TRAFFIC IN PROPOSED INFILTRATION AREAS PRIOR TO, DURING AND AFTER CONSTRUCTION.
2. **DIMENSIONS:**
   -WIDTH: 30" MINIMUM
   -DEPTH OF PLANTER (FROM TOP OF GROWING MEDIUM TO OVERFLOW WEIR ELEVATION): 12"
   -SLOPE OF PLANTER: 0.5% OR LESS
3. **SETBACKS:**
   -PLANTERS MUST BE MINIMUM OF 5 FEET FROM PROPERTY LINE.
4. **OVERFLOW:**
   -WEIR ELEVATION MUST ALLOW FOR 4" OF FREEBOARD, MINIMUM.
   -SIZE OVERFLOW WEIR FOR THE 100 YEAR DESIGN STORM. IDENTIFY EMERGENCY OVERFLOW ROUTE ON THE STORMWATER MANAGEMENT PLAN.
5. **DRAIN ROCK:**
   -SIZE: 1 1/2" - 3/4" WASHED
   -DEPTH: 28" MINIMUM
6. **SEPARATION** BETWEEN DRAIN ROCK AND GROWING MEDIUM: SHALL BE A 3" LAYER OF 3/4" - 1/4" OPEN GRADED AGGREGATE.
7. **GROWING MEDIUM:**
   -DEPTH: 18" MIMIMUM
   -SEE APPENDIX A FOR SPECIFICATION OR USE SAND/LOAM/COMPOST 3-WAY MIX.
   -FACILITY SURFACE AREA MAY BE REDUCED BY 20% WHEN GROWING MEDIA DEPTH IS INCREASED TO 30" OR MORE.
8. **VEGETATION:** FOLLOW LANDSCAPE PLANS OR REFER TO PLANTING REQUIREMENTS IN APPENDIX A.
9. **PLANTER WALLS:**
   -MATERIALS SHALL BE STONE, BRICK, CONCRETE OR OTHER DURABLE MATERIAL.
   -CONCRETE, BRICK, OR STONE WALLS SHALL BE INCLUDED ON FOUNDATION PLANS.
   -INSTALL INVERTED CURB AS NEEDED BETWEEN PLANTERS AND ROAD SUBGRADE.
   -WALL HEIGHTS GREATER THAN 24" ABOVE GRADE REQUIRE HANDRAIL.
10. **WATERPROOF LINER:**
    -LINER SHALL BE 30 MIL PVC OR EQUIVALENT.
    -A WATERPROOF LINER IS NOT REQUIRED IF THE WALL MATERIAL IS WATERPROOF REINFORCED CONCRETE OR APPROVED EQUAL.
11. **INSTALL RIVER ROCK** SPLASH PAD TO TRANSITION FROM INLET TO GROWING MEDIUM. SIZE OF ROCK SHALL BE 1" - 3".
12. **SEASONAL HIGH GROUNDWATER SEPARATION:**
    -SEPARATION DISTANCE AS REQUIRED BY THE CITY.
13. **SUBMIT RETAINING WALL DESIGN** IN ACCORDANCE WITH APPLICABLE STRUCTURAL CODES FOR REVIEW AND APPROVAL.

Stormwater Planter - Infiltration
Figure C-2

OREGON CITY
STORMWATER AND GRADING DESIGN STANDARDS

Stormwater Planters
Operations & Maintenance Plan

What to Look For	What to Do
Structural Components, including inlets and outlets/overflows, shall freely convey stormwater.	
Clogged inlets or outlets	-Remove sediment and debris from catch basins, trench drains and curb inlets and pipes to maintain at least 50% conveyance capacity at all times.
Cracked Drain Pipes	-Repair/seal cracks. Replace when repair is insufficient.
Check Dams	-Maintain 4 to 10 inch deep rock check dams at design intervals.
Vegetation	
Dead or strained vegetation	-Replant per original planting plan, or substitute from Appendix A. -Irrigate as needed. Mulch banks annually. DO NOT apply fertilizers, herbicides, or pesticides.
Tall Grass and Vegetation	-Cut back grass and prune overgrowth 1-2 times per year. Remove cuttings.
Weeds	-Manually remove weeds. Remove all plant debris.
Growing/Filter Medium, including soil and gravels, shall sustain healthy plant cover and infiltrate within 72 hours.	
Gullies	-Fill, lightly compact, and plant vegetation to disperse flow.
Erosion	-Replace splash blocks or inlet gravel/rock.
Slope Slippage	-Stabilize 3:1 slopes/banks with plantings from Appendix A.
Ponding	-Rake, till, or amend to restore infiltration rate.

Annual Maintenance Schedule:

Summer. Make any structural repairs. Improve filter medium as needed. Clear drain. Irrigate as needed.
Fall. Replant exposed soil and replace dead plants. Remove sediment and plant debris.
Winter. Monitor infiltration/flow-through rates. Clear inlets and outlets/overflows to maintain conveyance.
Spring. Remove sediment and plant debris. Replant exposed soil and replace dead plants. Mulch.
All seasons. Weed as necessary. Clean scuppers or curb inlets as needed.
Maintenance Records: Record date, description, and contractor (if applicable) for all structural repairs, landscape maintenance, and facility cleanout activities. Keep work orders and invoices on file and make available upon request of the inspector.
Access: Maintain ingress/egress to design standards.
Infiltration/Flow Control: All facilities shall drain within 72 hours. Record time/date, weather, and site conditions when ponding occurs.
Pollution Prevention: All sites shall implement best management practices to prevent hazardous or solid wastes or excessive oil and sediment from contaminating stormwater. Contact emergency response agencies for immediate assistance responding to spills. Record time/date, weather, and site conditions if site activities contaminate stormwater.
Vectors (Mosquitoes & Rodents): Stormwater facilities shall not harbor mosquito larvae or rats that pose a threat to public health or that undermine the facility structure. Monitor standing water for small wiggling sticks perpendicular to the water's surface. Note holes/burrows in and around facilities. Call Clackamas County Vector Control for immediate assistance to eradicate vectors. Record time/date, weather, and site conditions when vector activity observed.

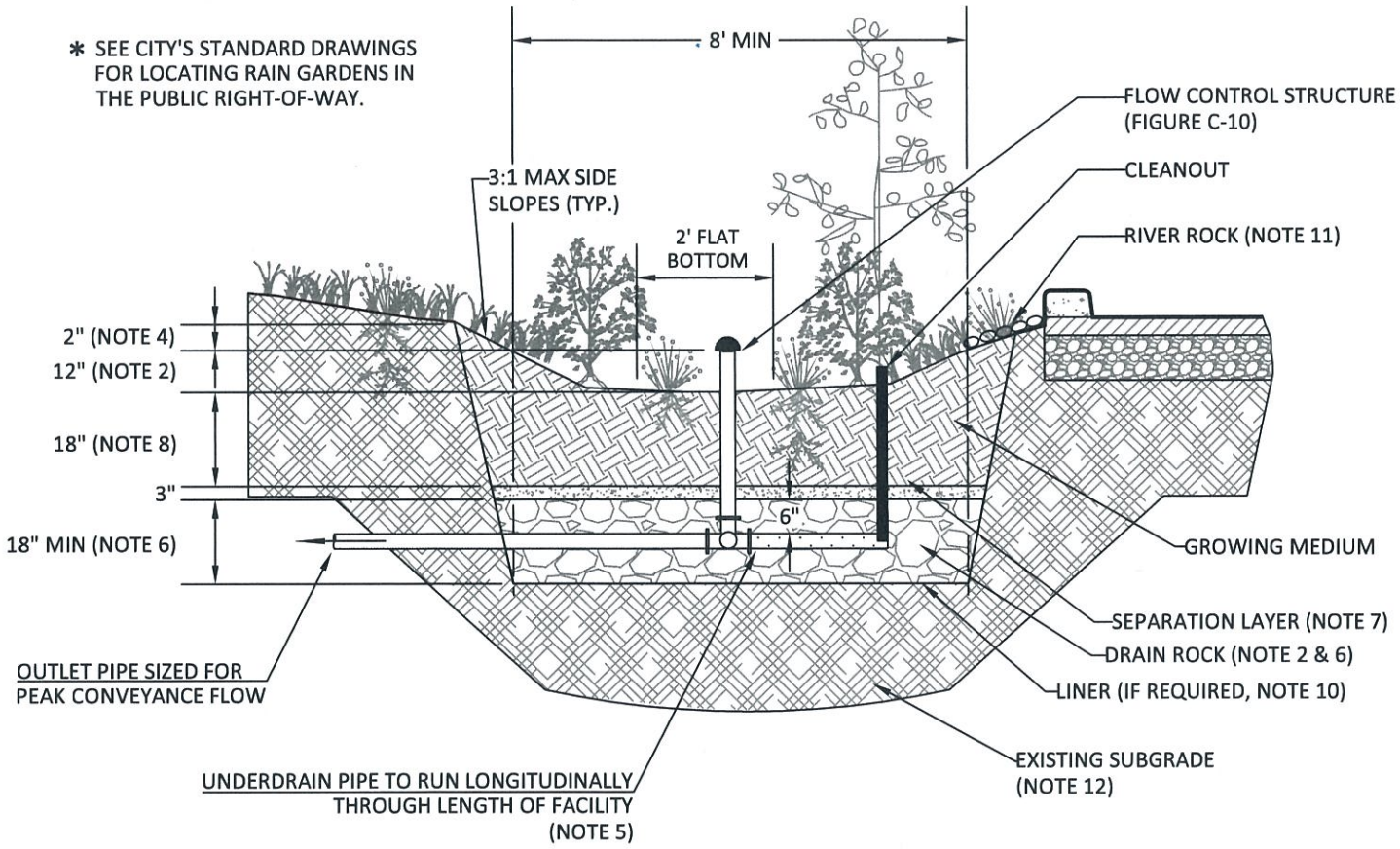

GENERAL NOTES:

1. **PROVIDE PROTECTION** FROM ALL VEHICLE TRAFFIC, EQUIPMENT STAGING, AND FOOT TRAFFIC IN PROPOSED INFILTRATION AREAS PRIOR TO, DURING AND AFTER CONSTRUCTION. UNLESS REQUIRED BY SITE CONDITIONS, UNLINED RAIN GARDENS ARE PREFERRED TO MAXIMIZE ONSITE INFILTRATION.
2. **DIMENSIONS:**
   -DEPTH OF BASIN (FROM TOP OF GROWING MEDIUM TO OVERFLOW ELEVATION): 12"
   -FLAT BOTTOM WIDTH: 2' MINIMUM
   -SIDE SLOPES OF BASIN: 3:1 MAXIMUM
   -SLOPE OF RAIN GARDEN: 0.5% OR LESS
   -FACILITY AREA SHALL BE MEASURED AT THE DEEPEST SECTION (DRAIN ROCK) OF FACILITY
3. **SETBACKS:**
   -FILTRATION RAIN GARDEN MUST BE 10' FROM FOUNDATIONS AND 5' FROM PROPERTY LINES UNLESS APPROVED BY BUILDING OFFICIAL.
4. **OVERFLOW:**
   -INLET ELEVATION MUST ALLOW FOR 2" OF FREEBOARD, MINIMUM. PROTECT FROM DEBRIS AND SEDIMENT WITH STRAINER OR GRATE.
   -IDENTIFY EMERGENCY OVERFLOW ROUTE ON THE STORMWATER MANAGEMENT PLAN.
5. **PIPING:**
   -PERFORATED UNDERDRAIN PIPING: SHALL BE ABS SCH. 40, DUCTILE IRON, OR PVC SCH.40. MINIMUM DIAMETER IS 6". PIPING MUST HAVE 1% GRADE AND FOLLOW THE UNIFORM PLUMBING CODE. PVC NOT ALLOWED ABOVE GROUND.
   -OVERFLOW PIPING: SHALL BE ABS SCH. 40, DUCTILE IRON, OR PVC SCH. 40 AND SHALL NOT BE PERFORATED. MINIMUM DIAMETER IS 6". PIPING MUST HAVE 1% GRADE AND FOLLOW THE UNIFORM PLUMBING CODE. PVC NOT ALLOWED ABOVE GROUND.
6. **DRAIN ROCK:**
   -SIZE: 1 1/2" to 3/4"-0 WASHED
   -DEPTH: 18" MINIMUM
7. **SEPARATION** BETWEEN DRAIN ROCK AND GROWING MEDIUM: SHALL BE A 3" LAYER OF 3/4" - 1/4" OPEN GRADED AGGREGATE OR FILTER FABRIC WITH 3" OF ADDITIONAL DRAIN ROCK MAY BE UTILIZED IN LIEU OF OPEN GRATED AGGREGATE IF APPROVED BY CITY ENGINEER.
8. **GROWING MEDIUM:**
   -DEPTH: 18" MINIMUM
   -SEE APPENDIX A FOR SPECIFICATION OR USE SAND/LOAM/COMPOST 3-WAY MIX.
   -FACILITY SURFACE AREA MAY BE REDUCED BY 20% WHEN GROWING MEDIA DEPTH IS INCREASED TO 30" OR MORE.
9. **VEGETATION:** FOLLOW LANDSCAPE PLANS OR REFER TO PLANTING REQUIREMENTS IN APPENDIX A.
10. **WATERPROOF LINER (IF REQUIRED):** SHALL BE 30 MIL PVC OR EQUIVALENT.
11. **INSTALL RIVER ROCK** OR SPLASH PAD TO TRANSITION FROM INLETS TO GROWING MEDIUM. SIZE OF ROCK SHALL BE 1" - 3".
12. **SEASONAL HIGH GROUNDWATER SEPARATION:**
    -SEPARATION DISTANCE AS REQUIRED BY CITY.

Rain Garden - Filtration
Figure C-4

OREGON CITY
STORMWATER AND GRADING DESIGN STANDARDS

* SEE CITY'S STANDARD DRAWINGS FOR LOCATING RAIN GARDENS IN THE PUBLIC RIGHT-OF-WAY.

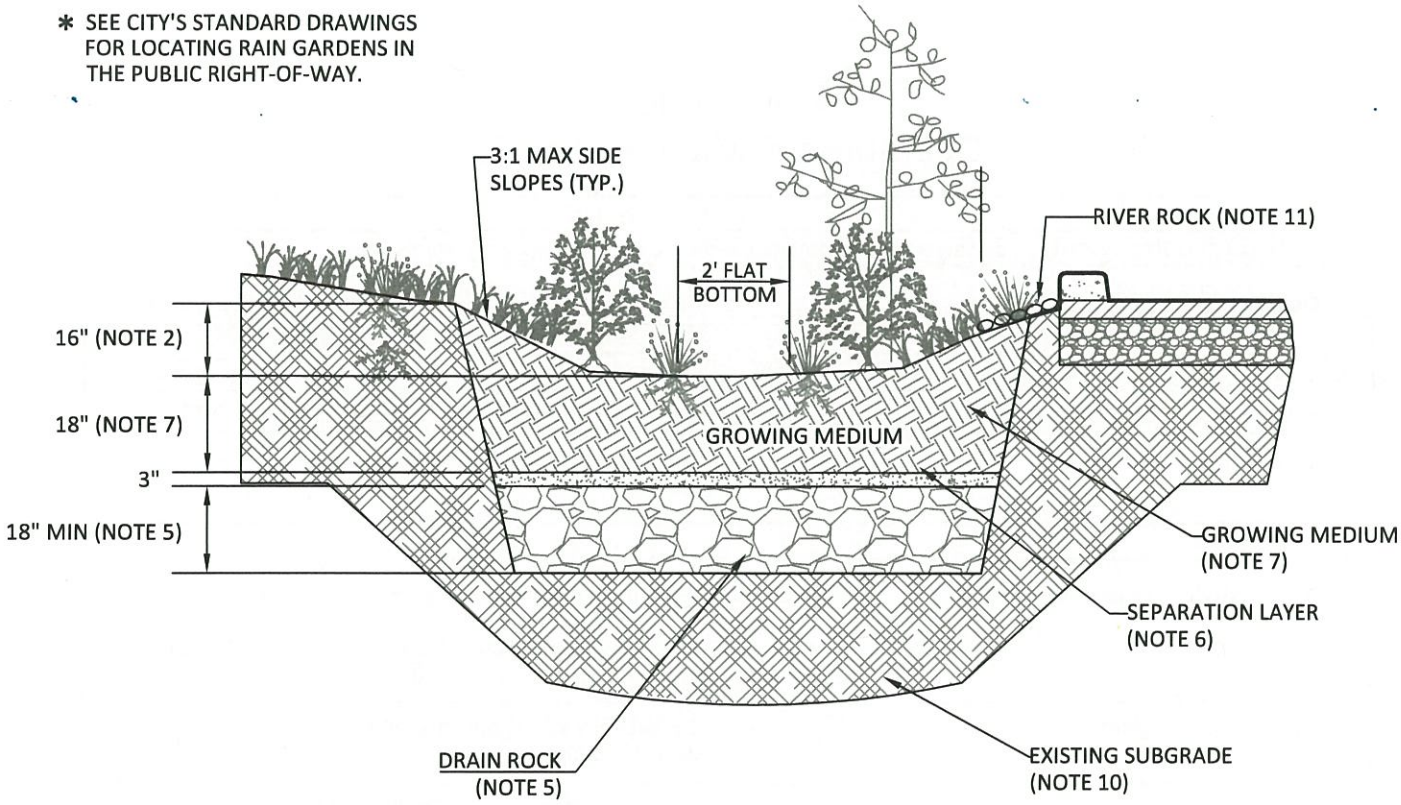

GENERAL NOTES:

1. **PROVIDE PROTECTION** FROM ALL VEHICLE TRAFFIC, EQUIPMENT STAGING, AND FOOT TRAFFIC IN PROPOSED INFILTRATION AREAS PRIOR TO, DURING AND AFTER CONSTRUCTION.
2. **DIMENSIONS:**
   -DEPTH OF BASIN (FROM TOP OF GROWING MEDIUM TO OVERFLOW ELEVATION): 16"
   -FLAT BOTTOM WIDTH: 2' MINIMUM
   -SIDE SLOPES OF BASIN: 3:1 MAXIMUM
   -SLOPE OF RAIN GARDEN: 0.5% OR LESS
3. **SETBACKS:**
   -INFILTRATION RAIN GARDEN MUST BE 10' FROM FOUNDATIONS AND 5' FROM PROPERTY LINES.
4. **OVERFLOW:**
   -INLET ELEVATION MUST ALLOW FOR 4" OF FREEBOARD, MINIMUM. PROTECT FROM DEBRIS AND SEDIMENT WITH STRAINER OR GRATE.
   -EMERGENCY OVERFLOW PATH FOR THE 100 YEAR DESIGN STORM SHALL BE IDENTIFIED IN THE STORMWATER MANAGEMENT PLAN.
5. **DRAIN ROCK:**
   -SIZE: 1 1/2" TO 3/4"- WASHED
   -DEPTH: 18"
6. **SEPARATION** BETWEEN DRAIN ROCK AND GROWING MEDIUM: SHALL BE A 3" LAYER OF 3/4" - 1/4" OPEN GRADED AGGREGATE.
7. **GROWING MEDIUM:**
   -DEPTH: 18" MINIMUM
   -SEE APPENDIX A FOR SPECIFICATION OR USE SAND/LOAM/COMPOST 3-WAY MIX.
   -FACILITY SURFACE AREA MAY BE REDUCED BY 20% WHEN GROWING MEDIA DEPTH IS INCREASED TO 30" OR MORE.
8. **VEGETATION:** FOLLOW LANDSCAPE PLANS OR REFER TO PLANTING REQUIREMENTS IN APPENDIX A.
9. **INSTALL RIVER ROCK** SPLASH PAD TO TRANSITION FROM INLET TO GROWING MEDIUM. SIZE OF ROCK SHALL BE 1" TO 3".
10. **SEASONAL HIGH GROUNDWATER SEPARATION:**
    -SEPARATION DISTANCE AS REQUIRED BY THE CITY.

Rain Garden - Infiltration
Figure C-5

OREGON CITY
STORMWATER AND GRADING DESIGN STANDARDS

Rain Gardens
Operations & Maintenance Plan

What to Look For	What to Do
Structural Components, including inlets and outlets/overflows, shall freely convey stormwater.	
Clogged inlets or outlets	-Remove sediment and debris from catch basins, trench drains and curb inlets and pipes to maintain at least 50% conveyance capacity at all times.
Cracked Drain Pipes	-Repair/seal cracks. Replace when repair is insufficient.
Check Dams	-Maintain 4 to 10 inch deep rock check dams at design intervals.
Vegetation	
Dead or strained vegetation	-Replant per original planting plan, or substitute from Appendix A. -Irrigate as needed. Mulch banks annually. DO NOT apply fertilizers, herbicides, or pesticides.
Tall Grass and Vegetation	-Cut back grass and prune overgrowth 1-2 times per year. Remove cuttings.
Weeds	-Manually remove weeds. Remove all plant debris.
Growing/Filter Medium, including soil and gravels, shall sustain healthy plant cover and infiltrate within 72 hours.	
Gullies	-Fill, lightly compact, and plant vegetation to disperse flow.
Erosion	-Replace splash blocks or inlet gravel/rock.
Slope Slippage	-Stabilize 3:1 slopes/banks with plantings from Appendix A.
Ponding	-Rake, till, or amend to restore infiltration rate.

Annual Maintenance Schedule:

Summer. Make any structural repairs. Improve filter medium as needed. Clear drain. Irrigate as needed.
Fall. Replant exposed soil and replace dead plants. Remove sediment and plant debris.
Winter. Monitor infiltration/flow-through rates. Clear inlets and outlets/overflows to maintain conveyance.
Spring. Remove sediment and plant debris. Replant exposed soil and replace dead plants. Mulch.
All seasons. Weed as necessary. Clean scuppers or curb cuts as needed.
Maintenance Records: Record date, description, and contractor (if applicable) for all structural repairs, landscape maintenance, and facility cleanout activities. Keep work orders and invoices on file and make available upon request of the inspector.
Access: Maintain ingress/egress to design standards.
Infiltration/Flow Control: All facilities shall drain within 72 hours. Record time/date, weather, and site conditions when ponding occurs.
Pollution Prevention: All sites shall implement best management practices to prevent hazardous or solid wastes or excessive oil and sediment from contaminating stormwater. Contact emergency response agencies for immediate assistance responding to spills. Record time/date, weather, and site conditions if site activities contaminate stormwater.
Vectors (Mosquitoes & Rodents): Stormwater facilities shall not harbor mosquito larvae or rats that pose a threat to public health or that undermine the facility structure. Monitor standing water for small wiggling sticks perpendicular to the water's surface. Note holes/burrows in and around facilities. Call Clackamas County Vector Control for immediate assistance to eradicate vectors. Record time/date, weather, and site conditions when vector activity observed.

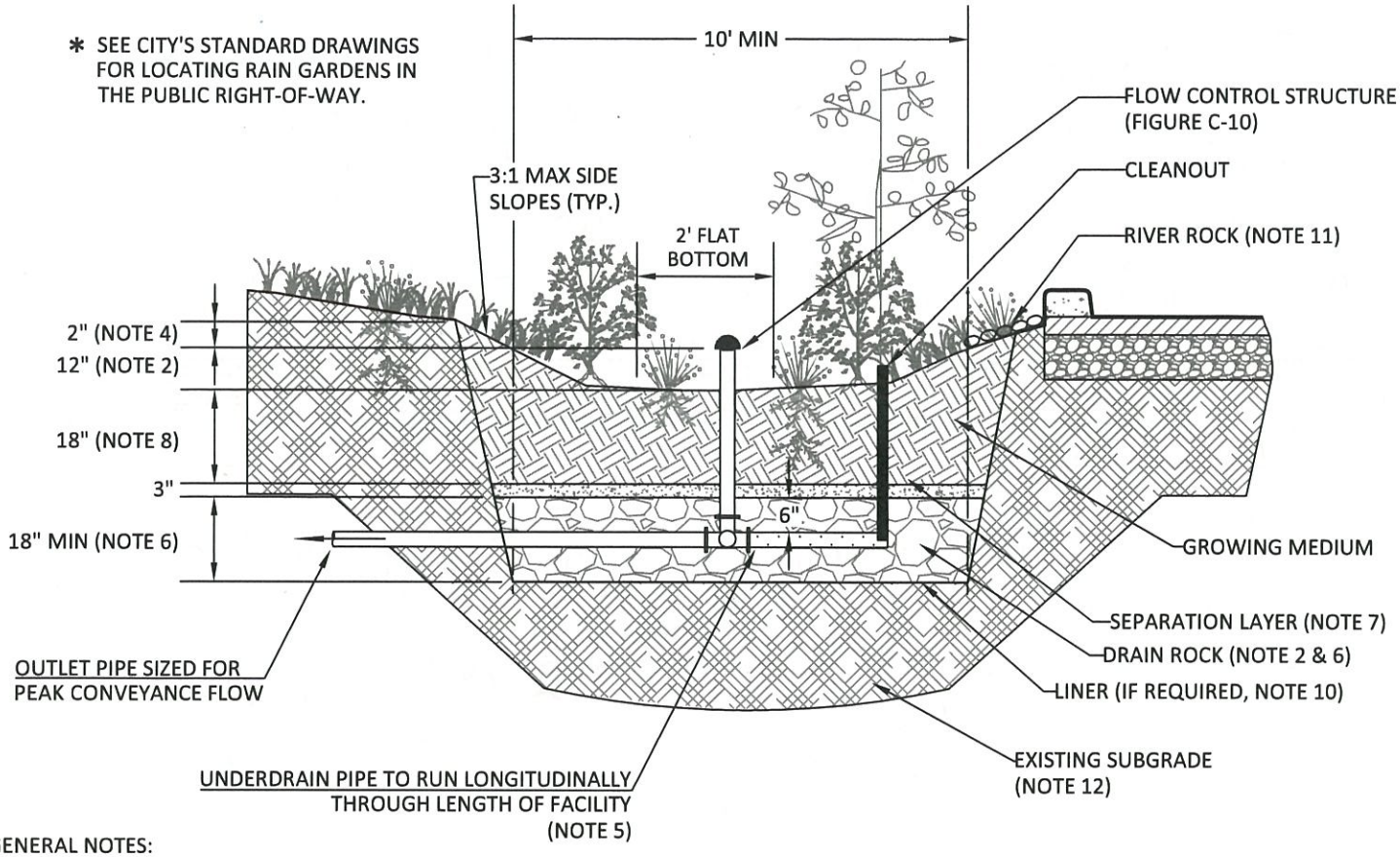

GENERAL NOTES:

1. **PROVIDE PROTECTION** FROM ALL VEHICLE TRAFFIC, EQUIPMENT STAGING, AND FOOT TRAFFIC IN PROPOSED INFILTRATION AREAS PRIOR TO, DURING AND AFTER CONSTRUCTION. UNLESS REQUIRED BY SITE CONDITIONS, UNLINED SWALES ARE PREFERRED TO ALLOW MAXIMUM INFILTRATION.
2. **DIMENSIONS:**
   -DEPTH OF SWALE (FROM TOP OF GROWING MEDIUM TO OVERFLOW ELEVATION): 12"
   -LONGITUDINAL SLOPE OF SWALE: 6.0% OR LESS
   -FLAT BOTTOM WIDTH: 2' MINIMUM
   -SIDE SLOPES OF SWALE: 3:1 MAXIMUM
   -FACILITY AREA SHALL BE MEASURED AT THE DEEPEST SECTION (DRAIN ROCK) OF FACILITY
3. **SETBACKS:**
   -FILTRATION SWALES MUST BE 10' FROM FOUNDATIONS AND 5' FROM PROPERTY LINES UNLESS APPROVED BY BUILDING OFFICIAL.
4. **OVERFLOW:**
   -INLET ELEVATION MUST ALLOW FOR 2" OF FREEBOARD, MINIMUM. PROTECT FROM DEBRIS AND SEDIMENT WITH STRAINER OR GRATE.
   -IDENTIFY EMERGENCY OVERFLOW ROUTE ON THE STORMWATER MANAGEMENT PLAN.
5. **PIPING:**
   -PERFORATED UNDERDRAIN PIPING: SHALL BE ABS SCH. 40, DUCTILE IRON, OR PVC SCH.40. MINIMUM DIAMETER IS 6". PIPING MUST HAVE 1% GRADE AND FOLLOW THE UNIFORM PLUMBING CODE. PVC NOT ALLOWED ABOVE GROUND.
   -OVERFLOW PIPING: SHALL BE ABS SCH. 40, DUCTILE IRON, OR PVC SCH. 40 AND SHALL NOT BE PERFORATED. MINIMUM DIAMETER IS 6". PIPING MUST HAVE 1% GRADE AND FOLLOW THE UNIFORM PLUMBING CODE. PVC NOT ALLOWED ABOVE GROUND.
6. **DRAIN ROCK:**
   -SIZE: 1 1/2" - 3/4" WASHED
   -DEPTH: 12"
7. **SEPARATION** BETWEEN DRAIN ROCK AND GROWING MEDIUM: SHALL BE A 3" LAYER OF 3/4" - 1/4" OPEN GRADED AGGREGATE.
8. **GROWING MEDIUM:**
   -18" MINIMUM
   -SEE APPENDIX A FOR SPECIFICATION OR USE SAND/LOAM/COMPOST 3-WAY MIX.
   -FACILITY SURFACE AREA MAY BE REDUCED BY 20% WHEN GROWING MEDIA DEPTH IS INCREASED TO 30" OR MORE.
9. **VEGETATION:** FOLLOW LANDSCAPE PLANS OR REFER TO PLANTING REQUIREMENTS IN APPENDIX A.
10. **WATERPROOF LINER (IF REQUIRED):** SHALL BE 30 MIL PVC OR EQUIVALENT.
11. **INSTALL RIVER ROCK** OR SPLASH PAD TO TRANSITION FROM INLETS TO GROWING MEDIUM. SIZE OF ROCK SHALL BE 1" TO 3".
12. **SEASONAL HIGH GROUNDWATER SEPARATION:**
    -SEPARATION DISTANCE AS REQUIRED BY CITY.
13. **CHECK DAMS:** SHALL BE PLACED ACCORDING TO FACILITY DESIGN.

Vegetated Swale - Filtration
Figure C-7

OREGON CITY
STORMWATER AND GRADING DESIGN STANDARDS

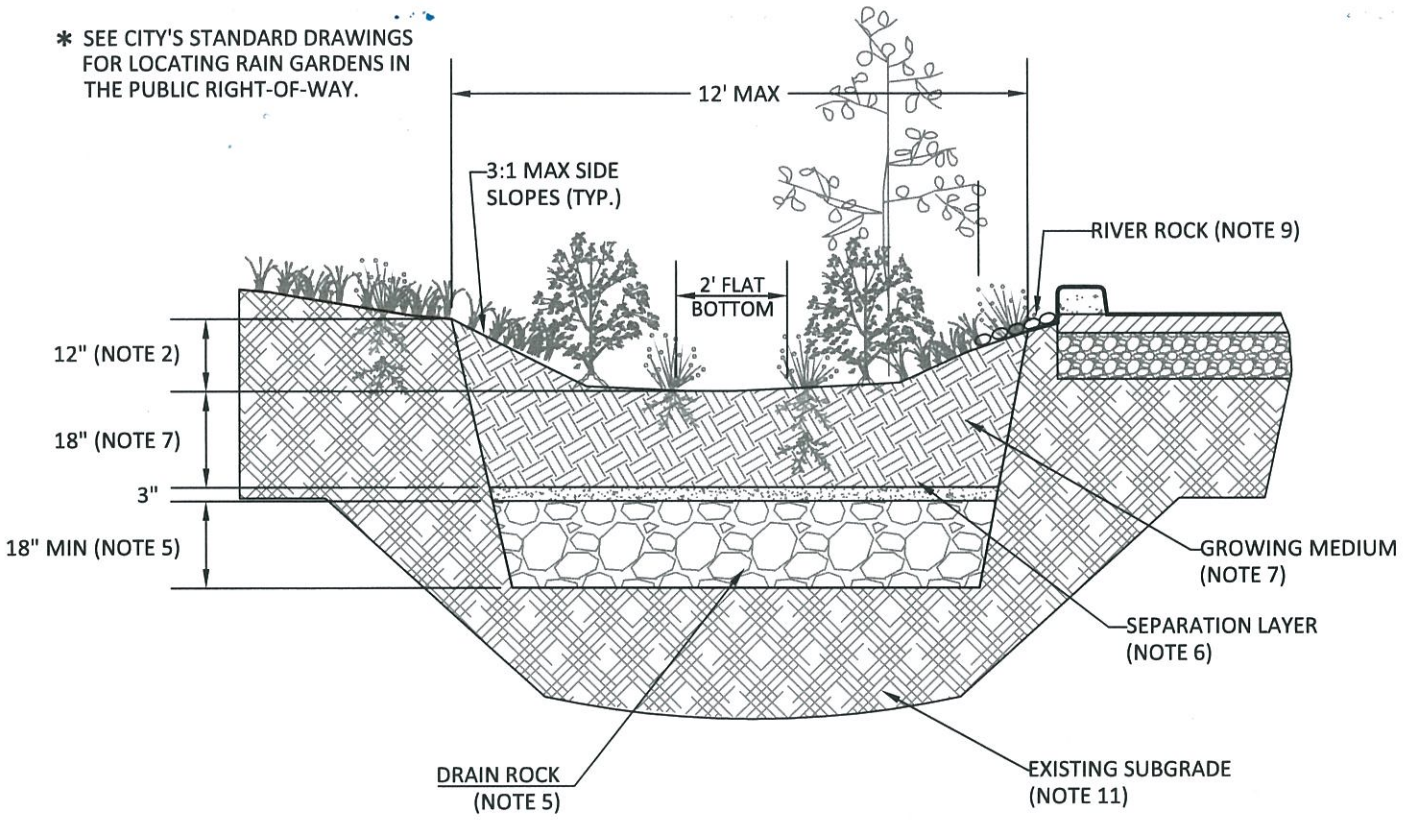

GENERAL NOTES:

1. **PROVIDE PROTECTION** FROM ALL VEHICLE TRAFFIC, EQUIPMENT STAGING, AND FOOT TRAFFIC IN PROPOSED INFILTRATION AREAS PRIOR TO, DURING AND AFTER CONSTRUCTION.
2. **DIMENSIONS:**
   -DEPTH OF SWALE (FROM TOP OF GROWING MEDIUM TO OVERFLOW ELEVATION): 12"
   -LONGITUDINAL SLOPE OF SWALE: 6.0% OR LESS
   -FLAT BOTTOM WIDTH: 2'
   -SIDE SLOPES OF SWALE: 3:1 MAXIMUM
3. **SETBACKS:**
   -INFILTRATION VEGETATED SWALES MUST BE 10' FROM FOUNDATIONS AND 5' FROM PROPERTY LINES.
4. **OVERFLOW:**
   -EMERGENCY OVERFLOW PATH FOR THE 100 YEAR DESIGN STORM SHALL BE IDENTIFIED ON THE STORMWATER MANAGEMENT PLAN.
5. **DRAIN ROCK:**
   -SIZE: 1 1/2" - 3/4"- WASHED
   -DEPTH: 18"
6. **SEPARATION** BETWEEN DRAIN ROCK AND GROWING MEDIUM: SHALL BE A 3" LAYER OF 3/4" - 1/4" OPEN GRADED AGGREGATE.
7. **GROWING MEDIUM:**
   -18" MINIMUM
   -SEE APPENDIX A FOR SPECIFICATION OR USE SAND/LOAM/COMPOST 3-WAY MIX.
   -FACILITY SURFACE AREA MAY BE REDUCED BY 20% WHEN GROWING MEDIA DEPTH IS INCREASED TO 30" OR MORE.
8. **VEGETATION:** FOLLOW LANDSCAPE PLANS OR REFER TO PLANTING REQUIREMENTS IN APPENDIX A.
9. **INSTALL RIVER ROCK** OR SPLASH PAD TO TRANSITION FROM INLETS TO GROWING MEDIUM. SIZE OF ROCK SHALL BE 1" TO 3".
10. **CHECK DAMS:** SHALL BE PLACED ACCORDING TO FACILITY DESIGN.
11. **SEASONAL HIGH GROUNDWATER SEPARATION:**
    -SEPARATION DISTANCE AS REQUIRED BY CITY.

Vegetated Swale - Infiltration
Figure C-8

OREGON CITY
STORMWATER AND GRADING DESIGN STANDARDS

Vegetated Swales
Operations & Maintenance Plan

What to Look For	What to Do
Structural Components, including inlets and outlets/overflows, shall freely convey stormwater.	
Clogged inlets or outlets	-Remove sediment and debris from catch basins, trench drains, curb inlets and pipes to maintain at least 50% conveyance capacity at all times.
Cracked Drain Pipes	-Replace/seal cracks. Replace when repair is insufficient.
Check Dams	-Maintain 4 - 10 inch deep rock check dams at design intervals.
Vegetation	
Dead or strained vegetation	-Replant per original planting plan, or substitute from Appendix A. -Irrigate as needed. Mulch banks annually. DO NOT apply fertilizers, herbicides, or pesticides.
Tall Grass and Vegetation	-Cut back to 4-6 inches, 1-2 times per year. Remove cuttings.
Weeds	-Manually remove weeds. Remove all plant debris.
Growing/Filter Medium, including soil and gravels, shall sustain healthy plant cover and infiltrate within 72 hours.	
Gullies	-Fill, lightly compact, and plant vegetation to disperse flow.
Erosion	-Restore or create outfalls, check dams, or splash blocks where necessary.
Slope Slippage	-Stabilize slope.
Ponding	-Rake, till, or amend to restore infiltration rate.

Annual Maintenance Schedule:

Summer. Make any structural repairs. Improve filter medium as needed. Clear drain. Irrigate as needed.
Fall. Replant exposed soil and replace dead plants. Remove sediment and plant debris.
Winter. Monitor infiltration/flow-through rates. Clear inlets and outlets/overflows to maintain conveyance.
Spring. Remove sediment and plant debris. Replant exposed soil and replace dead plants. Mulch.
All seasons. Weed as necessary. Clean scuppers or curb cuts as needed.
Maintenance Records: Record date, description, and contractor (if applicable) for all structural repairs, landscape maintenance, and facility cleanout activities. Keep work orders and invoices on file and make available upon request of the inspector.
Access: Maintain ingress/egress to design standards.
Infiltration/Flow Control: All facilities shall drain within 72 hours. Record time/date, weather, and site conditions when ponding occurs.
Pollution Prevention: All sites shall implement best management practices to prevent hazardous or solid wastes or excessive oil and sediment from contaminating stormwater. Contact emergency response agencies for immediate assistance responding to spills. Record time/date, weather, and site conditions if site activities contaminate stormwater.
Vectors (Mosquitoes & Rodents): Stormwater facilities shall not harbor mosquito larvae or rats that pose a threat to public health or that undermine the facility structure. Monitor standing water for small wiggling sticks perpendicular to the water's surface. Note holes/burrows in and around facilities. Call Clackamas County Vector Control for immediate assistance to eradicate vectors. Record time/date, weather, and site conditions when vector activity observed.

PLANTER, RAIN GARDEN, SWALE FLOW CONTROL STRUCTURE

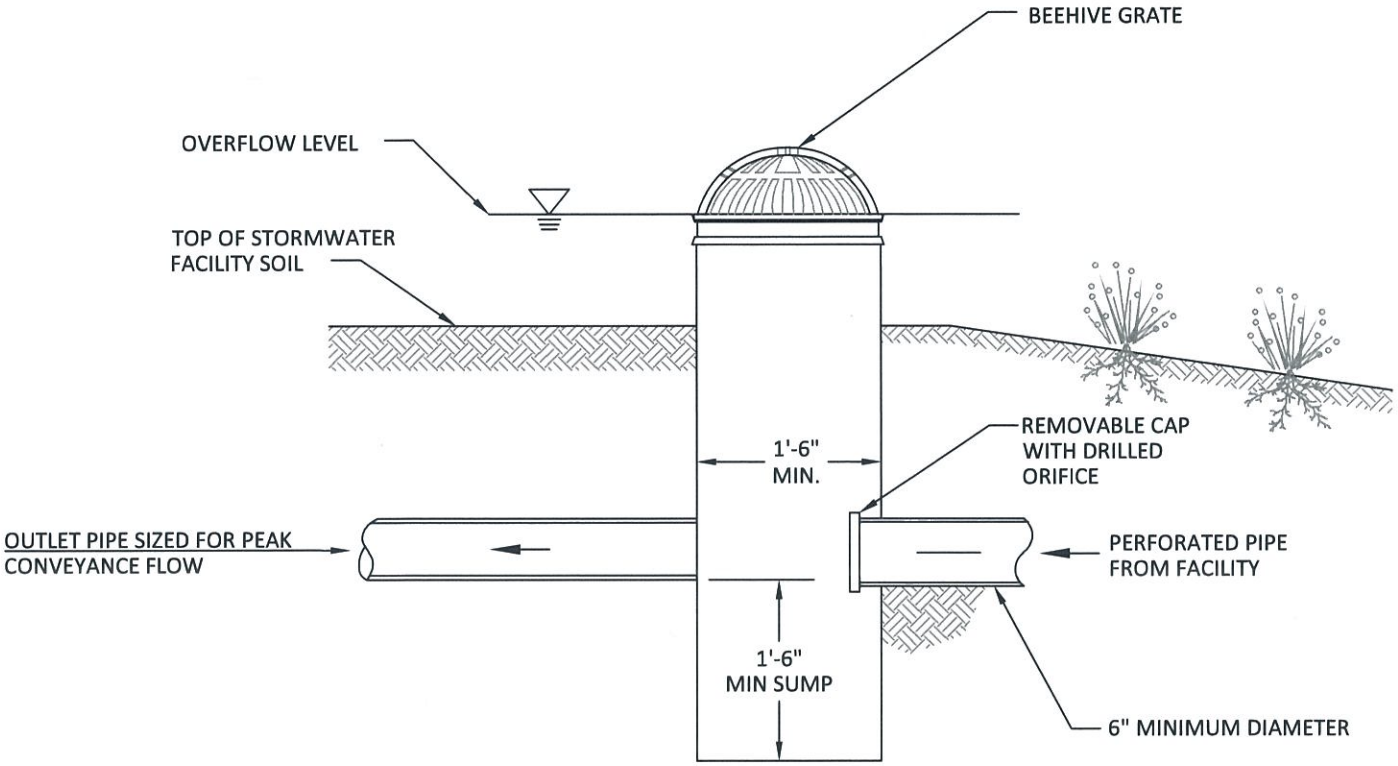

Planter, Rain Garden, Swale Flow Control Structure
Figure C-10

OREGON CITY
STORMWATER AND GRADING DESIGN STANDARDS

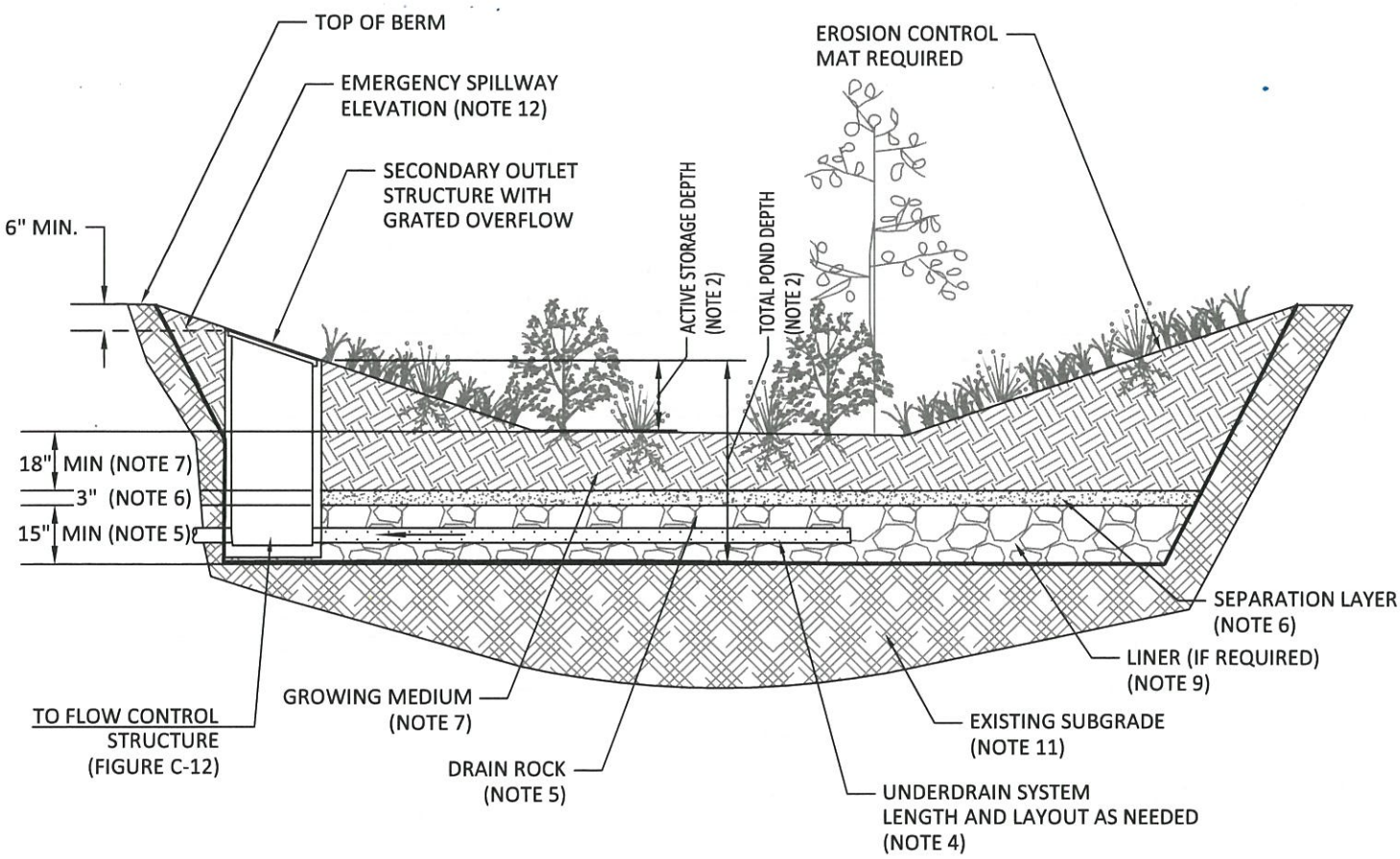

GENERAL NOTES:

1. **PROVIDE PROTECTION** FROM ALL VEHICLE TRAFFIC, EQUIPMENT STAGING, AND FOOT TRAFFIC IN PROPOSED INFILTRATION AREAS PRIOR TO, DURING AND AFTER CONSTRUCTION. UNLESS REQUIRED BY SITE CONDITIONS, UNLINED PONDS ARE PREFERRED TO ALLOW MAXIMUM INFILTRATION.
2. **DIMENSIONS:**
   -ACTIVE STORAGE DEPTH (FROM TOP OF GROWING MEDIUM TO OVERFLOW ELEVATION): PER FACILITY SIZING MODEL
   -FACILITY AREA SHALL BE MEASURED AT THE DEEPEST SECTION (DRAIN ROCK) OF FACILITY.
   -TOTAL POND DEPTH: 4' MINIMUM, PER FACILITY SIZING MODEL
   -BOTTOM SLOPE: 2.0% OR LESS
   -SIDE SLOPES OF DETENTION POND: 3:1 MAXIMUM
3. **SETBACKS:**
   -DETENTION POND MUST BE 10' FROM FOUNDATIONS AND 5' FROM PROPERTY LINES UNLESS APPROVED BY BUILDING OFFICIAL.
4. **PIPING:**
   -PERFORATED UNDERDRAIN PIPING: SHALL BE ABS SCH. 40, DUCTILE IRON OR PVC SCH. 40. 6" MINIMUM DIAMETER. PIPING MUST HAVE 1% GRADE AND FOLLOW THE UNIFORM PLUMBING CODE. PVC NOT ALLOWED ABOVE GROUND.
5. **DRAIN ROCK:**
   -SIZE: 1 1/2" - 3/4" WASHED
   -DEPTH: 15" MINIMUM
6. **SEPARATION** BETWEEN DRAIN ROCK AND GROWING MEDIUM: SHALL BE A 3" LAYER OF 3/4" - 1/4" OPEN GRADED AGGREGATE.
7. **GROWING MEDIUM:**
   -18" MINIMUM
   -SEE APPENDIX A FOR SPECIFICATION OR USE SAND/LOAM/COMPOST 3-WAY MIX.
8. **VEGETATION:** FOLLOW LANDSCAPE PLANS OR REFER TO PLANTING REQUIREMENTS IN APPENDIX A.
9. **WATERPROOF LINER (IF REQUIRED):** SHALL BE 30 MIL PVC OR EQUIVALENT FOR DETENTION POND.
10. **INSTALL RIVER ROCK** OR SPLASH PAD TO TRANSITION FROM INLETS TO GROWING MEDIUM. SIZE OF ROCK SHALL BE 1" TO 3".
11. **SEASONAL HIGH GROUNDWATER SEPARATION:**
    -SEPARATION DISTANCE AS REQUIRED BY CITY.
12. **EMERGENCY SPILLWAY** SIZED TO CONVEY THE 100 - YEAR DESIGN STORM. PROVIDE 6" MINIMUM FREEBOARD ABOVE THE 100 - YEAR DESIGN STORM.

Detention Pond
Figure C-11

OREGON CITY
STORMWATER AND GRADING DESIGN STANDARDS

DETENTION POND FLOW CONTROL STRUCTURE

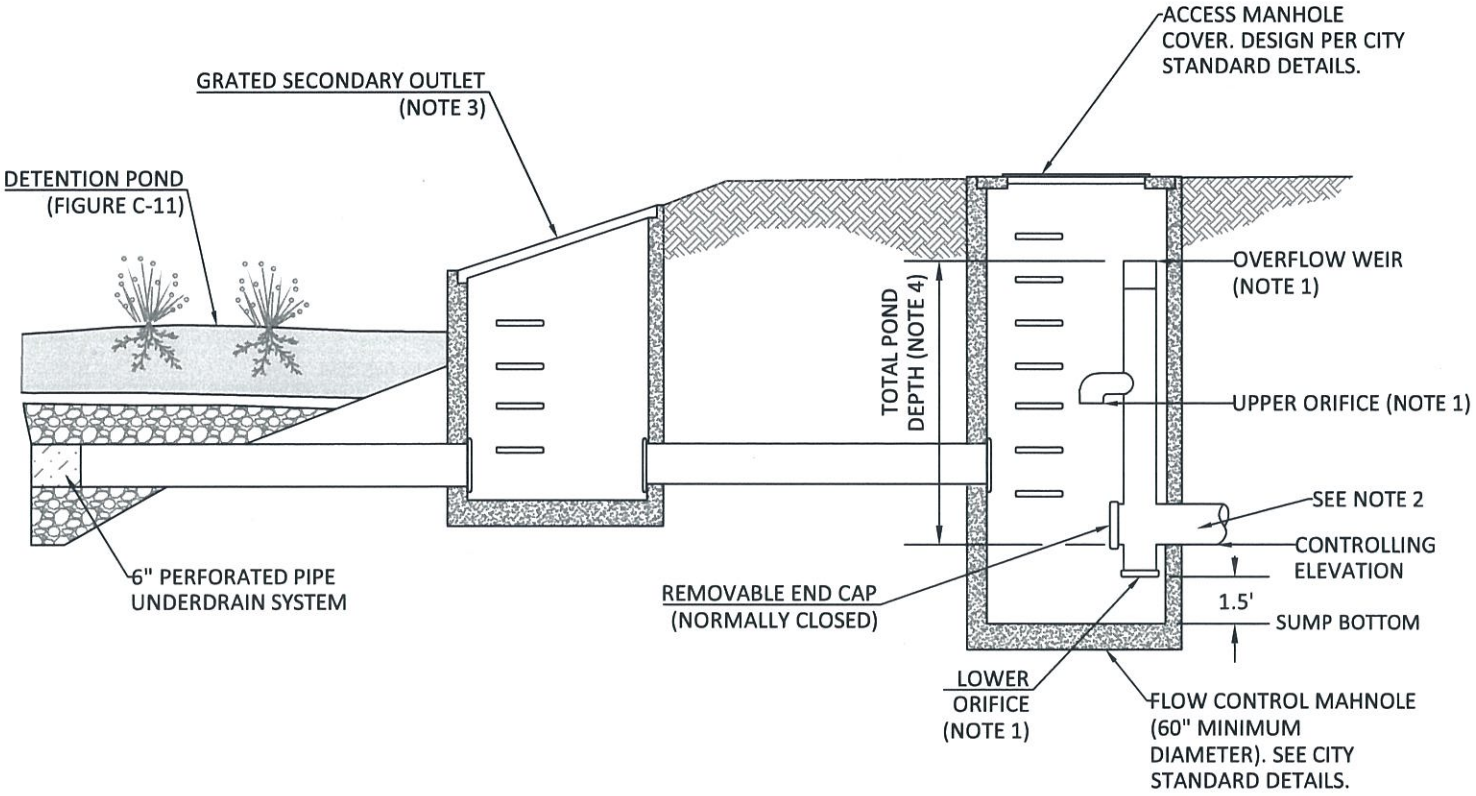

NOTES:

1. ORIFICE AND WEIR DIMENSIONS AND ELEVATION DETERMINED THROUGH FACILITY SIZING MODEL.
2. PIPE SIZING DETERMINED BY ENGINEER.
3. SECONDARY OUTLET SIZED FOR PEAK DESIGN STORM.
4. TOTAL POND DEPTH, PER FACILITY SIZING MODEL, INCLUDES GROWING MEDIA, SEPARATION LAYER, AND DRAIN ROCK AS SHOWN ON FIGURE C-11.

Detention Pond
Operations & Maintenance Plan

Detention Ponds remove pollutants through several processes: sedimentation, filtration, and biological processes. The facility owner must keep a log, recording all inspection dates, observations, and maintenance activities. The following items shall be inspected and maintained as stated:

What to Look For	What to Do
Structural Components, including inlets and outlets/overflows, shall freely convey stormwater.	
Clogged inlets or outlets	-Remove sediment and debris from catch basins, trench drains, curb inlets and pipes to maintain at least 50% conveyance capacity at all times.
Cracked Drain Pipes	-Repair/seal cracks. Replace when repair is insufficient.
Clogged Control Structures	-Remove accumulated sediment and debris.
Vegetation shall cover 90% of the facility.	
Dead or strained vegetation	-Replant per original planting plan, or substitute from Appendix A. -Irrigate as needed. Mulch banks annually. DO NOT apply fertilizers, herbicides, or pesticides.
Tall Grass and Vegetation	-Cut back grass and prune overgrowth 1-2 times per year. Remove cuttings.
Weeds	-Manually remove weeds. Remove all plant debris.
Growing/Filter Medium, including soil and gravels, shall sustain healthy plant cover and infiltrate within 72 hours.	
Gullies	-Fill, lightly compact, and plant vegetation to disperse flow.
Erosion	-Replace splash blocks or inlet gravel/rock.
Slope Slippage	-Stabilize 3:1 Slopes/banks with plantings from Appendix A.
Ponding	-Rake, till, or amend to restore infiltration rate.

Annual Maintenance Schedule:

All facility components, vegetation, and source controls shall be inspected for proper operations and structural stability. These inspections shall occur, at a minimum, quarterly for the first 2 years from the date of installation, and 2 times per year thereafter, and within 48 hours after each major storm event.

Access: Maintain ingress/egress to design standards.

Infiltration/Flow Control: All facilities shall drain within 72 hours. Record time/date, weather, and site conditions when ponding occurs.

Pollution Prevention: All sites shall implement best management practices to prevent hazardous or solid wastes or excessive oil and sediment from contaminating stormwater. Contact emergency response agencies for immediate assistance responding to spills. Record time/date, weather, and site conditions if site activities contaminate stormwater.

Vectors (Mosquitoes & Rodents): Stormwater facilities shall not harbor mosquito larvae or rats that pose a threat to public health or that undermine the facility structure. Monitor standing water for small wiggling sticks perpendicular to the water's surface. Note holes/burrows in and around facilities. Call Clackamas County Vector Control for immediate assistance to eradicate vectors. Record time/date, weather, and site conditions when vector activity observed.

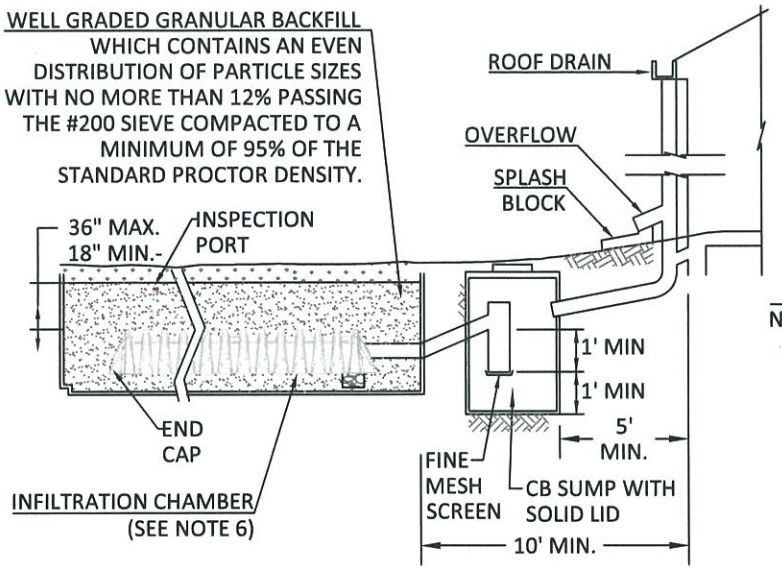

PROFILE VIEW
NOT TO SCALE

POSSIBLE ALIGNMENTS

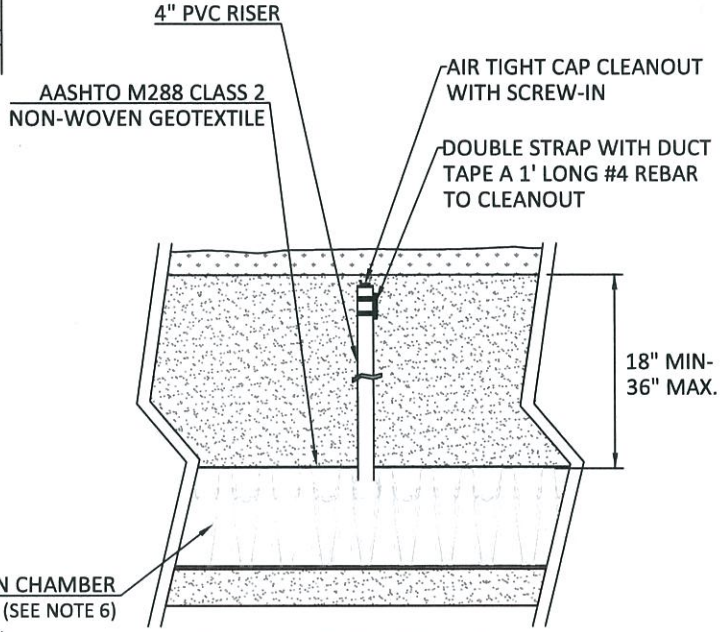

INSPECTION PORT DETAIL
NOT TO SCALE

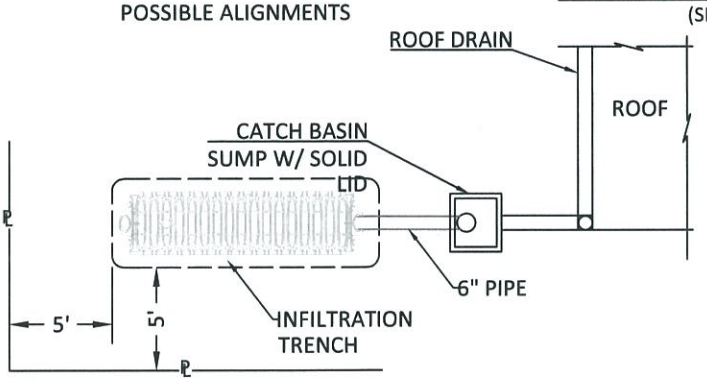

PLAN VIEW
NOT TO SCALE

GENERAL NOTES

1. USE OF INFILTRATION SYSTEMS ONLY ALLOWED FOR SITES WITH FACTORED INFILTRATION TEST RESULTS OF AT LEAST 2 IN/HR OR FACILITY IS PLACED ENTIRELY WITHIN AN AREA WITH HYDROLOGIC SOIL GROUP A.
2. FOR SIZING OF FACILITY THE MINIMUM STORAGE VOLUME (CF) = 0.2 x TOTAL IMPERVIOUS AREA (SF).
3. INFILTRATION CHAMBERS ARE TO BE ENTIRELY WRAPPED BY AASHTO M288 CLASS 2 NON-WOVEN GEOTEXTILE.
4. VOLUME OF CHAMBER VARIES WITH EACH CHAMBER MANUFACTURER AND MODEL.
5. PROVIDE AN ADEQUATE NUMBER OF CHAMBERS TO MEET OR EXCEED THE MINIMUM REQUIRED CHAMBER VOLUME.
6. INFILTRATION CHAMBERS SHALL BE MANUFACTURED BY ONE OF THE FOLLOWING OR APPROVED EQUAL:

STORMTECH (WWW.STORMTECH.COM) 1-888-892-2694	CULTEC INC. (WWW.CULTEC.COM) 1-800-4-CULTEC	INFILTRATOR SYSTEMS INC. (WWW.INFILTRATORSYSTEMS.COM) 1-800-718-2754

7. SOIL CLASSIFICATION MAP IS AVAILABLE FOR VIEWING AT WWW.ORCITY.ORG.

Underground Infiltration System
Figure C-14

OREGON CITY
STORMWATER AND GRADING DESIGN STANDARDS

Underground Infiltration System
Operations & Maintenance Plan

What to Look For	What to Do
Structural Components, include pipes, manholes, rock/sand reservoirs, storm chambers and silt traps.	
Clogged inlets or outlets	-Clean gutters, rain drains, and silt traps twice a year. -Clear piping to facility when blockage occurs.
Cracked Drain Pipes	-Repair/seal cracks. Replace when repair is insufficient.
Catch Basin	-Remove accumulated sediment annually.
Vegetation includes surface cover and nearby plantings.	
Large Shrubs and Trees	-Prevent large root systems from damaging subsurface structural components.
Filter Layer, includes rock/gravel bed.	
Ponding Water	-Clear piping through facility when ponding occurs. -Replace rock/sand reservoirs as necessary. -Tilling of subgrade below reservoir may be necessary (for trenches) prior to backfill. -May require decommissioning and replacement (for infiltrators or trenches).

Annual Maintenance Schedule:

Summer. Make necessary structural repairs. Clean silt traps.
Fall. Clean gutters and rain drains.
Winter. Monitor infiltration rates.
Spring. Clean gutters and rain drains.
Maintenance Records: Record date, description, and contractor (if applicable) for all structural repairs, landscape maintenance, and facility cleanout activities. Keep work orders and invoices on file and make available upon request of the inspector.
Access: Maintain ingress/egress to design standards.
Infiltration/Flow Control: All facilities shall drain within 72 hours. Record time/date, weather, and site conditions when ponding occurs.
Pollution Prevention: All sites shall implement best management practices to prevent hazardous or solid wastes or excessive oil and sediment from contaminating stormwater. Contact emergency response agencies for immediate assistance responding to spills. Record time/date, weather, and site conditions if site activities contaminate stormwater.
Vectors (Mosquitoes & Rodents): Stormwater facilities shall not harbor mosquito larvae or rats that pose a threat to public health or that undermine the facility structure. Monitor standing water for small wiggling sticks perpendicular to the water's surface. Note holes/burrows in and around facilities. Call Clackamas County Vector Control for immediate assistance to eradicate vectors. Record time/date, weather, and site conditions when vector activity observed.

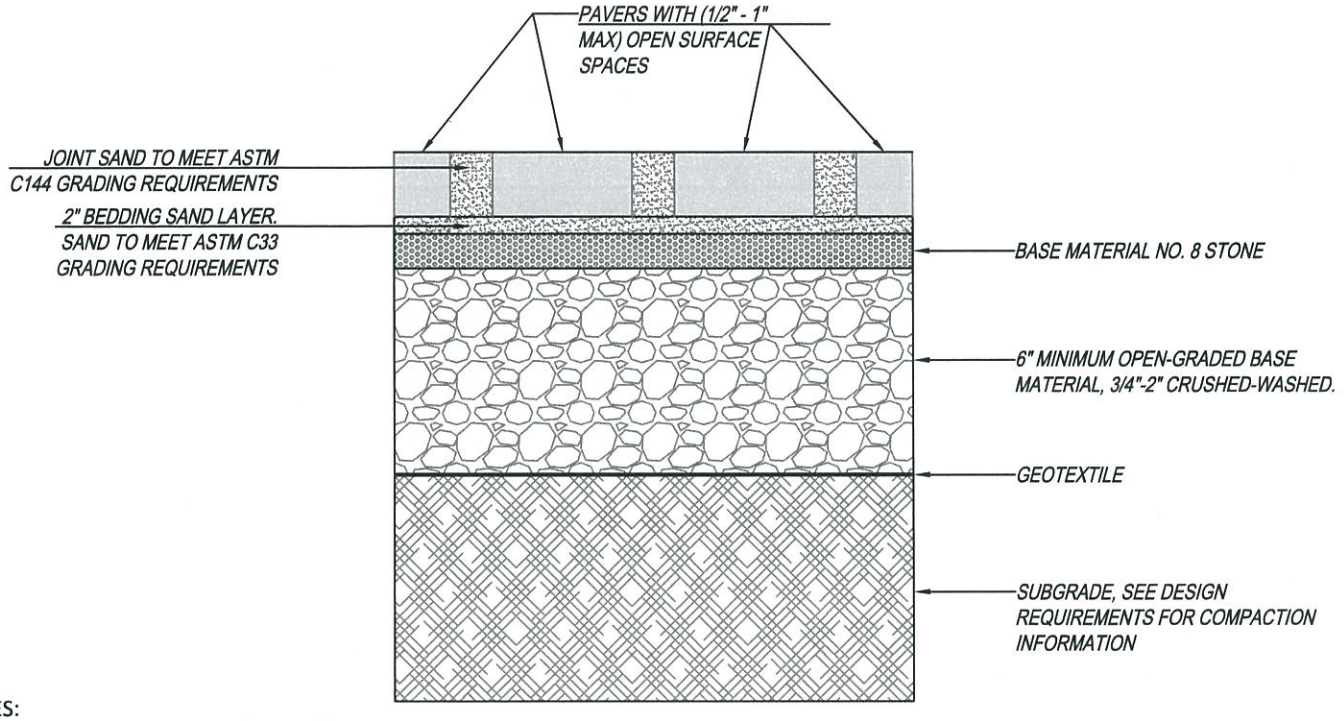

PERVIOUS CONCRETE BLOCK OR "PAVER" SYSTEMS

NOTES:

1. THE DESIGN ENGINEER SHALL SUBMIT PERVIOUS PAVEMENT DESIGN AND SPECIFICATIONS IN CONFORMANCE WITH INDUSTRY STANDARDS.
2. PAVERS AVERAGE COMPRESSIVE STRENGTH OF 8,000 PSI. NO INDIVIDUAL UNIT LESS THAN 7,200 PSI. MINIMUM 80 MM THICKNESS.
3. BANDED BY CONCRETE EDGE RESTRAINTS.
4. MANHOLE COLLARS PER CITY STANDARD DETAIL.

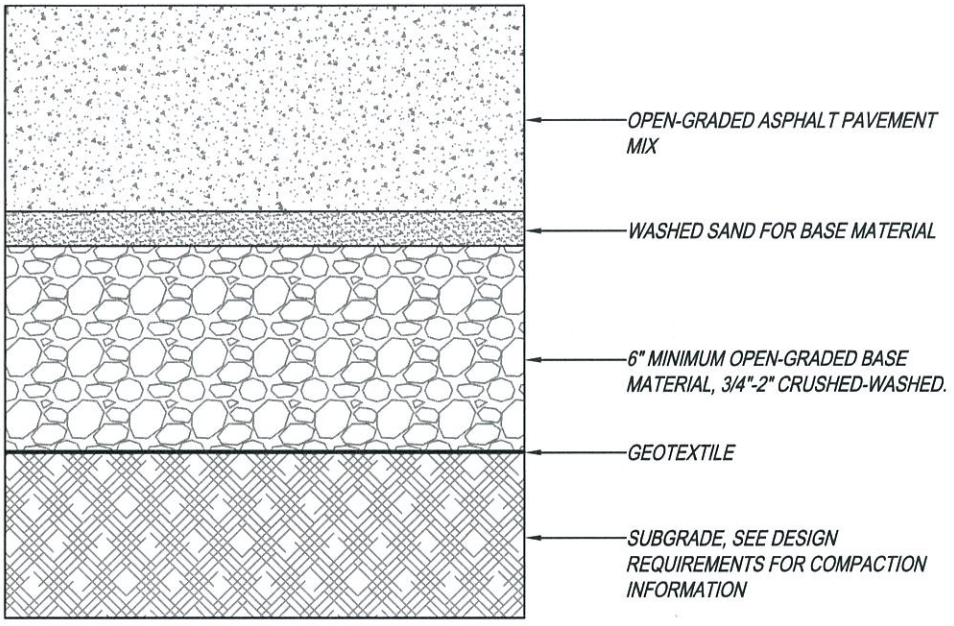

PERVIOUS (OPEN GRADED) CONCRETE SYSTEMS

Pervious Pavement
Figure C-16

OREGON CITY
STORMWATER AND GRADING DESIGN STANDARDS

Pervious Pavement
Operations & Maintenance Plan

Pervious pavement is a permeable pavement surface with an underlying stone reservoir that temporarily stores surface runoff before infiltrating into the subsoil or being collected in underlying drain pipes and being discharged off-site. There are many types of pervious pavement including plastic rings planted with grass, stone or concrete blocks with pore spaces backfilled with gravel or sand, porous asphalt, and porous concrete. Pervious pavement accepts only precipitation, not stormwater runoff. The following items shall be inspected and maintained as stated:

What to Look For	What to Do
Structural Components, including surface materials, shall evenly infiltrate stormwater.	
Clogged surface	-Vacuum sweep at least twice a year. -Powerwash annually or as needed. Do not use surfactants.
Cracked or moving edge restraints	-Repair per manufacturer's recommendations.
Cracked or loose pavement	-Repair per manufacturer's recommendations.
Vegetation includes surface cover and nearby plantings.	
Large Shrubs and Trees	-Sweep leaf litter and sediment to prevent surface clogging and ponding. -Prevent large root systems from damaging pavement. -Manually remove weeds. Remove all plant debris.
Filter Medium	
Aggregate loss in pavers from settling and from power washing.	-Replace paver pore space with aggregate from original design.

Maintenance Schedule:

Summer. Make necessary structural repairs.
Fall. Vacuum sweep.
Winter. Monitor infiltration rates.
Spring. Power wash with proper disposal. Vacuum sweep.
All Seasons: Weed as necessary.
Maintenance Records: Record date, description, and contractor (if applicable) for all structural repairs, landscape maintenance, and facility cleanout activities. Keep work orders and invoices on file and make available upon request of the inspector.
Access: Maintain ingress/egress to design standards.
Infiltration/Flow Control: All facilities shall not retain standing water during dry weather. Record time/date, weather, and site conditions when ponding occurs.
Pollution Prevention: All sites shall implement best management practices to prevent hazardous or solid wastes or excessive oil and sediment from contaminating stormwater. Contact emergency response agencies for immediate assistance responding to spills. Record time/date, weather, and site conditions if site activities contaminate stormwater.
Vectors (Mosquitoes & Rodents): Stormwater facilities shall not harbor mosquito larvae or rats that pose a threat to public health or that undermine the facility structure. Monitor standing water for small wiggling sticks perpendicular to the water's surface. Note holes/burrows in and around facilities. Call Clackamas County Vector Control for immediate assistance to eradicate vectors. Record time/date, weather, and site conditions when vector activity observed.

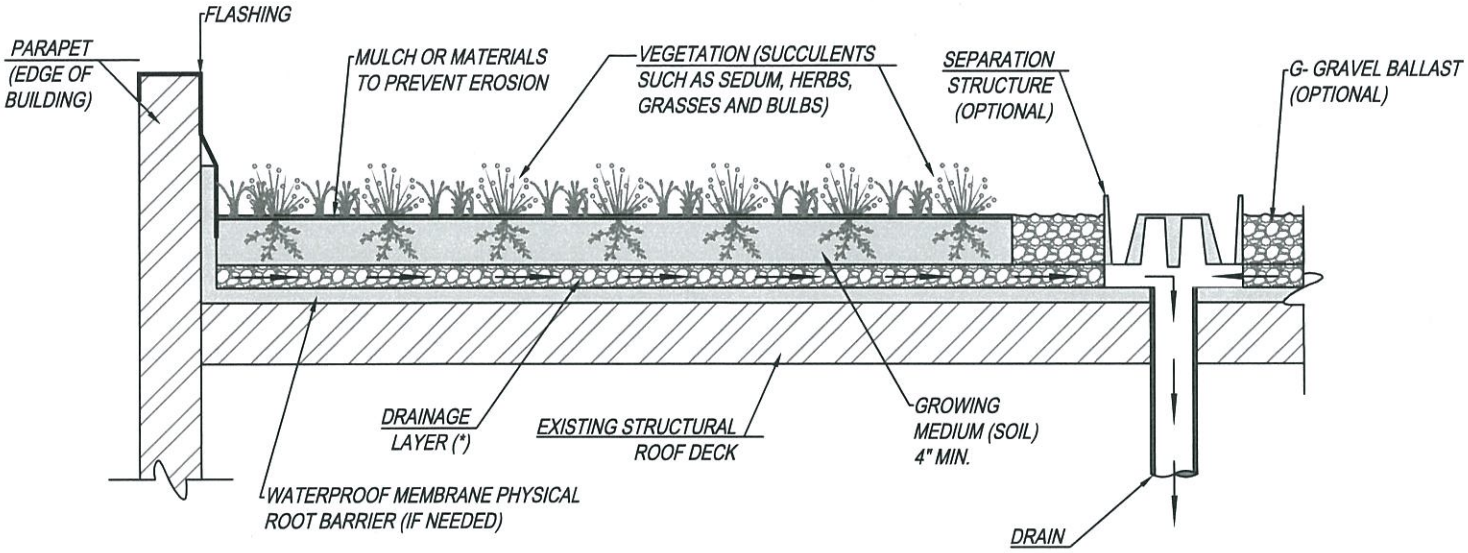

* SEE DETAIL BELOW FOR OPTION

GREEN ROOF WITH DRAINAGE LAYER

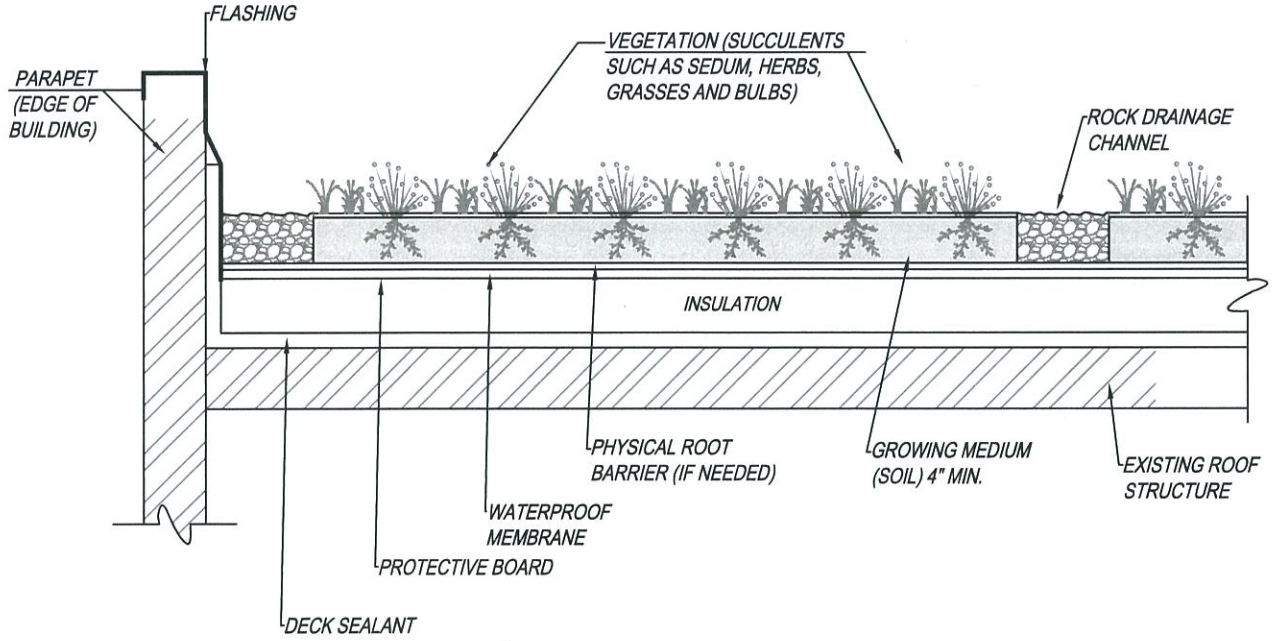

GREEN ROOF WITH DRAINAGE CHANNELS

GENERAL NOTES:

1. **THE DESIGN ENGINEER** SHALL SUBMIT GREEN ROOF DESIGN AND SPECIFICATIONS IN CONFORMANCE WITH INDUSTRY STANDARDS.

Green Roof
Figure C-18

OREGON CITY
STORMWATER AND GRADING DESIGN STANDARDS

Green Roof
Operations & Maintenance Plan

Green Roofs are vegetated roof systems that retain and filter stormwater and provide aesthetic and energy conservation benefits. All facility components, including soil substrate or growth medium, vegetation, drains, irrigation systems (if applicable), membranes, and roof structure shall be inspected for proper operations, integrity of the waterproofing, and structural stability throughout the life of the green roof. The facility owner must keep a log, recording all inspection dates, observations, and maintenance activities. The following items shall be inspected and maintained as stated:

What to Look For	What to Do
Structural Components, including waterproof membrane, shall be operated and maintained in accordance with the manufacturer's and design specifications.	
Clogged drains	-Repair any leaks or structural deficiencies. -Remove sediment and debris if necessary.
Tears or perforated membrane	-Contact manufacturer for repair or replacement.
Vegetation shall cover 90% of facility.	
Dead or strained vegetation	-Replant per original planting plan, or substitute from Appendix A.
Dry Grass or other Plants	-Prune tall, dry grasses and remove clippings.
Weeds	-Manually remove weeds. Do not use pesticides. Remove all plant debris.
Growing/Filter Medium including soil and gravels, shall sustain healthy plant cover and infiltrate within 48 hours.	
Exposed soil	-Cover with plants and mulch as needed.
Eroded soils and gullies	-Fill, hand tamp or lightly compact, and plant vegetation to disperse flow.
Crusting, dry or shrinking medium	-Rake or amend to restore filtration or flow.
Ponding or excessive moisture	-Amend soils and clear drains.

Maintenance Schedule:

Summer. Make necessary structural repairs. Improve growing medium as needed. Clear drains. Irrigate as needed.
Fall. Replant exposed soil and dead plants. Remove sediment and debris from drains. Provide erosion control for bare soil if neccessary.
Winter. Monitor infiltration rates. Clear drains as needed.
Spring. Replant exposed soil and dead plants. Remove sediment and debris from drains.
All Seasons: Weed as necessary.
Maintenance Records: Record date, description, and contractor (if applicable) for all structural repairs, landscape maintenance, and facility cleanout activities. Keep work orders and invoices on file and make available upon request of the inspector.
Access: Maintain ingress/egress to design standards.
Irrigation: Adjust irrigation program or consult professional to set system at correct watering system.
Infiltration/Flow Control: All facilities shall drain within 48 hours. Record time/date, weather, and site conditions when ponding occurs.
Pollution Prevention: All sites shall implement best management practices to prevent hazardous wastes from contaminating stormwater. Record time/date, weather, and site conditions if site activities contaminate stormwater.
Vectors (Mosquitoes & Rodents): Green Roof shall not harbor mosquito larvae or rodents that pose a threat to public health or that undermine the facility structure. Contact Clackamas County Vector Control for assistance. Record time/date, weather, and site conditions when vector activity observed. Record when vector abatement started and ended.

STORMWATER FACILITIES
OPERATIONS AND MAINTENANCE CHECKLIST

Problem	Recommended / Required	Trigger	Preferred Condition
Sediment Accumulation in Treatment Area	Monthly from November through April / Annually Required	Sediment depth exceeds 3 inches	Sediment removed from vegetated treatment area: level side to side and drains freely toward outlet; no standing water within 24 hours of any major storm (1" in 24 hours)
Erosion Scouring	Monthly from November through April / Annually Required	Exposed earth or rutted soil	Repair ruts or bare areas by filling with topsoil during dry season; regrade and replant large bare areas
Standing Water	Monthly from November through April and after any major storm event (1 inch in 24 hours)	Standing water in the planter between storms that does not drain freely	Remove sediment or trash blockages; improve end to end grade so there is no standing water 24 hours after any major storm (1 inch in 24 hours)
Flow not Distributed Evenly	Monthly from November through April / Annually Required	Flows unevenly distributed through planter width due to uneven or clogged flow spreader	Level the spreader and clean so that flows spread evenly over entire planter width
Settlement/ Misalignment	Annually Required	Failure of planters has created safety, function, or design problem	Planter replaced or repaired to design standards
Constant Baseflow	Monthly from November through April / Annually Required	Small, continual flow of water through the planter even after weeks without rain; planter bottom has an eroded, muddy channel	Add a low-flow pea gravel drain the length of the planter or bypass the baseflow around the planter
Vegetation	Monthly from November through April / Annually Required	Vegetation blocking more than 10% of the inlet pipe opening	No vegetation blocking the inlet pipe opening
Poor Vegetation Coverage	Monthly / Annually Required	Grass or other vegetation is sparse, or bare in more than 10% of the planter area	Determine cause of poor growth and correct the condition; replant with plants (per Appendix A) as needed to meet facility standards
Invasive Vegetation	Monthly / Annually Required	No invasive vegetation is planted or permitted to remain	No invasive vegetation present; remove excessive weeds. Control if complete eradication is not feasible
Rodents	Monthly / Annually Required	Evidence of rodents or rodent damage	No rodents; functioning facility
Insects	Annually Required	Insects such as wasps and hornets that interfere with maintenance activities	Harmful Insects removed
Trash and Debris	Monthly and after any major storm event (1 inch in 24 hours) / Annually Required	Visual evidence of trash, debris or dumping	Trash and Debris removed from facility
Contamination and Pollution	Monthly from November through April / Annually Required	Any evidence of oil, gasoline, contamination or other pollutants	No contaminants or pollutants present; coordinate removal/cleanup with local water quality response agency
Obstructed Inlet/Outlet	Monthly and after any major storm event (1 inch in 24 hours) / Annually Required	Inlet/outlet areas clogged with sediment, vegetation or debris	Clear inlet and outlet; obstructions removed
Excessive Shading	Monthly from November through April / Annually Required	Vegetation growth is poor because sunlight does not reach planter	Trim over-hanging limbs and/or remove brushy vegetation as needed
Vegetation	Monthly from November through April / Annually Required	Specified or approved grass grows so tall that it competes with shrubs and/or becomes a fire danger	String trim non-wetland grasses to 4 to 6 inches and remove clippings; protect woody vegetation

Stormwater and Grading Design Standards

APPENDIX D

Infiltration Testing

APPENDIX D. INFILTRATION TESTING

D.1 General

To properly size and locate stormwater management facilities, it is necessary to characterize the soil infiltration conditions at the location of the proposed facility. All projects that require a stormwater management facility shall evaluate existing site conditions and determine if the site's infiltration rate is adequate to support the proposed stormwater management facility. The following sections provide the approved methods for testing infiltration and setting the design infiltration rate. City staff may require additional testing on a case-by-case basis.

D.2 Basic Method - Open Pit Test

The Basic Method – Open Pit Test (Basic Method) is applicable only to projects on private property with less than 10,000 square feet of new or redeveloped impervious area. The results of infiltration testing shall be documented on the Basic Method Form. The Basic Method cannot be used for projects that have known downstream conveyance problems.

The intent of the Basic Method is to determine whether or not the local infiltration rate is adequate to support an infiltration facility. The Basic Method infiltration test does not need to be conducted by a licensed professional, but it is recommended.

D.2.1 Basic Method Instructions

1. Conduct one test for each proposed stormwater management facility. The test should be where the facility is proposed or within the direct vicinity.
2. Excavate a test hole to the depth of the bottom of the infiltration system, or otherwise to 4 feet. The test hole can be excavated with small excavation equipment or by hand using a shovel, auger, or posthole digger.
3. If a layer hard enough to prevent further excavation is encountered, or if noticeable moisture/water is encountered in the soil, stop, measure, and record this depth from the surface. Proceed with the test at this depth.
4. Fill the hole with water to a height of about 6 inches from the bottom of the hole (or to one-half the maximum depth of the proposed facility), and record the exact time. Check the water level at regular intervals (every 1 minute for fast-draining soils to every 10 minutes for slower-draining soils) for a minimum of 1 hour or until all of the water has infiltrated. Record the distance the water has dropped from the top edge of the hole.
5. Repeat this process two more times, for a total of three rounds of testing. These tests should be performed as close together as possible to portray the soil's ability to infiltrate at different levels of saturation accurately. The third test provides the best measure of the saturated infiltration rate.
6. For each test pit required, submit all three testing results with the date, duration, drop in water height, and conversion into inches per hour.

If the applicant would like to use an infiltration rate for design purposes, a Professional Method Infiltration Test shall be conducted.

D.3 Professional Method

The Professional Method shall be used for all public and private developments with more than 10,000 square feet of new or redeveloped impervious area. The Professional Method shall also be used for all public and private developments with known downstream conveyance problems.

Three infiltration testing methods are available, as outlined in **Sections D.3.5 through D.3.7**. The qualified professional shall exercise judgment in the selection of the infiltration test method.

D.3.1 Testing Criteria

1. Testing shall be conducted or observed by a qualified professional. This professional shall be a Professional Engineer (PE), Registered Geologist (RG), or Certified Engineering Geologist (CEG) licensed in the state of Oregon.
2. The location and depth of the test shall correspond to the facility location and depth.
3. Infiltration testing should not be conducted in engineered or undocumented fill.
4. Boring logs shall be provided as supporting information with infiltration and depth to groundwater tests.
5. All testing data shall be documented in the project submittals. The submittals shall demonstrate that the proposed facilities are sized appropriately for the tested infiltration rates.

D.3.2 Depth and Location of Required Tests

Infiltration tests shall be performed at the base of the proposed facility.

If a confining layer, or soil with a greater percentage of fines, is observed during the subsurface investigation to be within 4 feet of the bottom of the planned infiltration system, the testing shall be conducted within that confining layer.

Tests shall be performed in the immediate vicinity of the proposed facility. Exceptions can be made to the test location provided the qualified professional can support that the strata are consistent from the proposed facility to the test location.

For relatively deep stormwater facilities, a hollow stem auger with an electronic measuring tape can be used, provided there is an adequate seal between the auger and the native soil.

D.3.3 Minimum Number of Required Tests

The total number of infiltration tests is at the discretion of the qualified professional assessing the site and the City Engineer, provided the following minimums are met:

- At least one test for any proposed street facility.
- One test for every 100 lineal feet or 1,000 square feet of proposed infiltration facility.

- Where multiple types of facilities are used, it is likely that multiple tests will be necessary, since an infiltration test can test only a single soil stratum. It is highly recommended to conduct an infiltration test at each stratum used.

D.3.4 Factors of Safety

Table D-1 lists the recommended factors of safety to be applied to field obtained infiltration rates for use in stormwater system design. To obtain the infiltration rate used in design, divide the infiltration rate measured in the field by the factor of safety. The factor of safety used in design should be chosen by collaboration between the geotechnical engineer or geologist overseeing the infiltration testing and the civil engineer designing the stormwater management system. Determination of the factor of safety shall include consideration of project specific conditions such as soil variability, testing methods, consequences of system failure, complexity of proposed construction, and other pertinent conditions. The maximum design infiltration rate is 20 inches per hour.

Table D-1. Infiltration Rate Safety Factors

Test Method	Recommended Correction Factors
Encased Falling Head	3
Open Pit Falling Head	2
Double-Ring Infiltrometer	Public Facilities: 1 Private Facilities: 2

D.3.5 Open Pit Falling Head Procedure

The open pit falling head procedure is based on the Environmental Protection Agency (EPA) Falling Head Percolation Test Procedure (*Onsite Wastewater Treatment and Disposal Systems Design Manual,* EPA/625/1-80-012, 1980). The test is performed in an open excavation and therefore is a test of the combination of vertical and lateral infiltration.

1. Excavate an approximately 2-foot by 2-foot-wide hole into the native soil to the elevation of the proposed facility bottom. The test can be conducted in a machine-excavated pit or a hand-dug pit using a shovel, posthole digger, or hand auger. If smooth auguring tools or a smooth excavation bucket is used, scratch the sides and bottom of the hole with a sharp-pointed instrument, and remove the loose material from the bottom of the test hole.
2. A 2-inch layer of coarse sand or fine gravel may be placed to protect the bottom from scour and sloughing.
3. Fill the hole with clean water a minimum of 1 foot above the soil to be tested, and maintain this depth of water for at least 4 hours (or overnight if clay soils are present) to presoak the native material.

4. Percolation rate measurements shall be made after 15 hours and no more than 30 hours after the soaking period begins. It is important that the soil be allowed to soak for a sufficiently long period of time to allow the soil to swell if accurate results are to be obtained. Any soil that sloughed into the hole during the soaking period shall be removed and the water level shall be adjusted to 6 inches above the added gravel (or 8 inches above the bottom of the hole).
5. In sandy soils with little or no clay, soaking is not necessary. If after filling the hole twice with 12 inches of water, the water seeps completely away in less than 10 minutes, the test can proceed immediately.
6. The measurements should be made with reference to a fixed point. A lath placed in the test pit prior to filling or a sturdy beam across the top of the pit are convenient reference points. The tester and excavator should conduct all testing in accordance with OSHA regulations.
7. Measure the water level to the nearest 0.01 foot (1/8 inch) at 10-minute intervals for a total period of 1 hour (or 20-minute intervals for 2 hours in slower soils) or until all of the water has drained. At no time during the test is the water level allowed to rise more than 6 inches above the gravel.
8. Successive trials shall be run until the measured infiltration rate between two successive trials does not vary by more than 5 percent. At least three trials shall be conducted. After each trial, the water level is readjusted to the 12-inch level. Enter results into the **Infiltration Test Data Table** provided at the end of this section.
9. The results of the last water level drop are used to calculate the tested infiltration rate. The final rate shall be reported in inches per hour. See the calculation following the **Infiltration Test Data Table** provided at the end of this section.
10. For very rapidly draining soils, it may not be possible to maintain a water head above the bottom of the test pit. If the infiltration rate meets or exceeds the flow of water into the test pit, conduct the test in the following manner:
    a. Approximate the area over which the water is infiltrating.
    b. Using a water meter, bucket, or other device, measure the rate of water discharging into the test pit.
    c. Calculate the infiltration rate by dividing the rate of discharge (cubic inches per hour) by the area over which it is infiltrating (square inches).
11. Upon completion of the testing, the excavation shall be backfilled.

D.3.6 Encased Falling Head Test Procedure

The encased falling head procedure is based on a modification of the EPA Falling Head Percolation Test Procedure (*Onsite Wastewater Treatment and Disposal Systems Design Manual,* EPA/625/1-80-012, 1980). The most significant modification is that this test is performed with a 6-inch casing that is embedded approximately 6 inches into the native soil. The goal of this field test is to evaluate the vertical infiltration rate through a 6-inch plug of soil, without allowing any lateral infiltration. The test is not appropriate in gravelly soils or in other soils where a good seal with the casing cannot be established.

1. Embed a solid 6-inch-diameter casing into the native soil at the elevation of the proposed facility bottom (see **Figure D-1**). Ensure that the embedment provides a good seal around the pipe casing so that percolation will be limited to the 6-inch plug of the material within the casing. This method can also be applied to testing within hollow stem augers, provided the driller and tester are reasonably certain that a good seal has been achieved between the soil and auger.
2. A 2-inch layer of coarse sand or fine gravel may be placed to protect the bottom from scour and sloughing.
3. Fill the pipe with clean water a minimum of 1 foot above the soil to be tested, and maintain this depth for at least 4 hours (or overnight if clay soils are present) to presoak the native material.

   Percolation rate measurements shall be made after 15 hours and no more than 30 hours after the soaking period begins. It is important that the soil be allowed to soak for a sufficiently long period of time to allow the soil to swell if accurate results are to be obtained. Any soil that sloughed into the hole during the soaking period shall be removed and the water level shall be adjusted to 6 inches above the added gravel (or 8 inches above the bottom of the hole).

   In sandy soils with little or no clay, soaking is not necessary. If after filling the hole twice with 12 inches of water, the water seeps completely away in less than 10 minutes, the test can proceed immediately.
4. To conduct the first trial of the test, fill the pipe to approximately 6 inches above the soil and measure the water level to the nearest 0.01 foot (1/8 inch). The level should be measured with a tape or other device with reference to a fixed point. The top of the pipe is often a convenient reference point. Record the exact time.
5. Measure the water level to the nearest 0.01 foot (1/8 inch) at 10-minute intervals for a total period of 1 hour (or 20-minute intervals for 2 hours in slower soils) or until all of the water has drained. The infiltration test is continued until the measured infiltration rate between two successive trials does not vary by more than 5 percent. At least three trials shall be conducted. After each trial, the water level is readjusted to the 6-inch level. Enter results into the **Infiltration Test Data Table** provided at the end of this section. At no time during the test is the water level allowed to rise more than 6 inches above the gravel.
6. The result of the last water level drop is used to calculate the tested infiltration rate. The final rate shall be reported in inches per hour.
7. Upon completion of the testing, the casings shall be immediately pulled, and the test pit shall be backfilled.

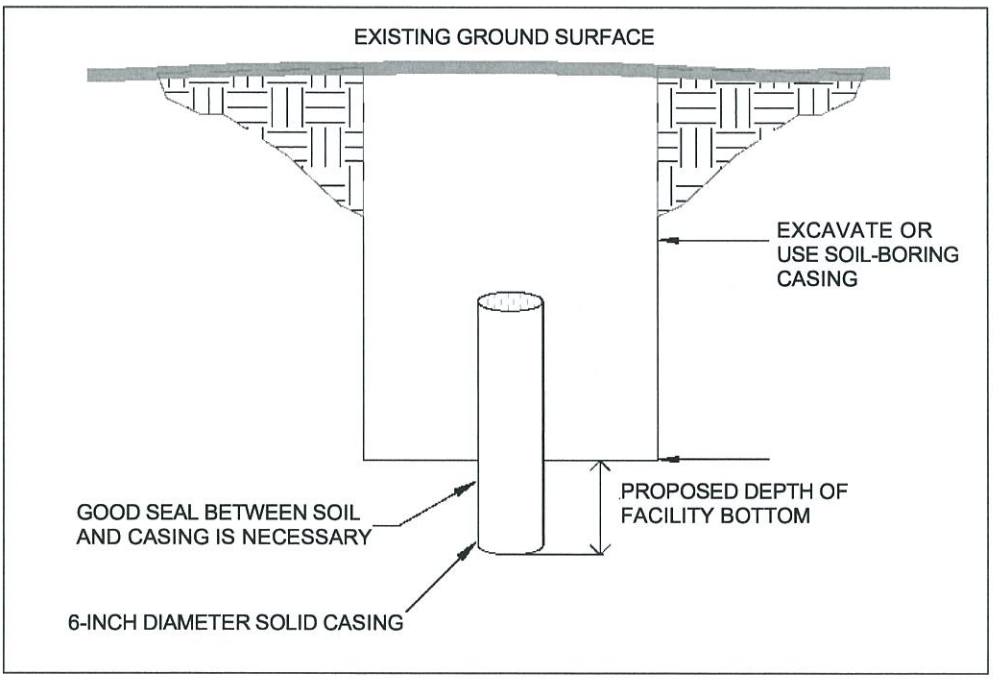

Figure D-1. Encased falling head procedure

D.3.7 Double Ring Infiltrometer Test

The double-ring infiltrometer test procedure shall conform with ASTM 3385-94. The test is performed within two concentric casings embedded and sealed to the native soils. The outer ring maintains a volume of water to diminish the potential of lateral infiltration through the center casing. The volume of water added to the center ring to maintain a static water level is used to calculate the infiltration rate. The double-ring infiltrometer is appropriate only in soils where an adequate seal can be established.

This test may be difficult to perform where the tested soil strata are in a pit, since careful regulation of the static volumes is necessary.

D.4. Reporting Requirements

In addition to the information required by the state for a signed and stamped Geotechnical Engineering Report, the following information should be included in the project's submittals.

1. Infiltration results in inches per hour.
2. Location and depth of excavation. The excavation should be deep enough to verify that there is a 5-foot separation between the final depth of the facility (rock gallery) and the seasonal high groundwater or soil layer that could reduce the infiltration rate.
3. Summary and discussion of infiltration testing, including number of tests, amounts of water used in each test (inches, gallons, etc.), and time of each test. Testing is required to show that an accurate rate was achieved.

4. Discussion of how the test was performed:
   - Open pit (size of area)
   - Encased falling head
     - Pipe type
     - Embedment depth
     - Size of pipe
   - Double ring infiltrometer
     - Pipe type
     - Embedment depth
     - Size of pipe
5. **Infiltration Test Data Table** provided at the end of this appendix.
6. Soil types with depth.
7. Groundwater observations–seasonal high groundwater level estimation.

Infiltration Test Data Table		
Location:	**Date:**	**Test Hole Number:**
Depth to bottom of hole:	**Diameter of hole:**	**Test Method:**
Tester's Name: **Tester's Company:**	**Tester's Contact Number:**	

Depth, feet	Soil Texture

Time	Time interval, minutes	Measurement, feet	Drop in water level, feet	Percolation rate, inches per hour	Remarks

Infiltration Test Data Table Example		
Location: Lot 105, Low Point Heights Subdivision	**Date:** 6/28/2010	**Test Hole Number:** 3
Depth to bottom of hole: 57 inches	**Diameter of hole:** 0.5 feet	**Test Method:** Encased falling head
Tester's Name: C.J. Tester **Tester's Company:** Tester Company	**Tester's Contact Number:** 555-1212	

Depth, feet	Soil Texture
0-0.5	Black Top Soil
0.5-1.0	Brown SM
1.0-2.2	Brown ML
2.2-5.1	Brown CL

Time	Time interval, minutes	Measurement, feet	Drop in water level, feet	Percolation rate, inches per hour	Remarks
9:00	0	3.75	-		Filled with 6"
9:20	20	3.83	0.08		
9:40	20	3.91	0.08	2.88	
10:00	20	3.98	0.07	2.52	
10:20	20	4.04	0.06	2.16	
10:40	20	4.11	0.07	2.52	
11:00	20	4.17	0.06	2.16	
11:20	20	4.225	0.055	1.98	
					Adjusted to 6" level for Trial #2

Calculation is performed for each water level drop

= (Drop in water level/Time interval) x conversion

= 0.055ft/20min x (12in/ft) x (60min/hr)

= 1.98 inches per hour

The design infiltration rate of two successive trials shall have a difference of 5% or less.

Stormwater and Grading Design Standards

APPENDIX E

Manufactured Treatment Technologies

APPENDIX E. MANUFACTURED TREATMENT TECHNOLOGIES

Manufactured treatment technologies are proprietary systems, developed to serve specific stormwater management needs. New technologies are always under development to meet the standards of urban stormwater pollutant control. Some manufactured treatment technologies are stand-alone systems and others must be used in conjunction with additional facilities (a "treatment train") in order to accomplish pollutant removal goals.

Oregon City relies on the City of Portland's submission and review protocols to establish a list of approved manufactured stormwater treatment technologies. Engineers wishing to use a manufactured treatment technology for proprietary treatment device for stormwater management should refer to the current version of the City of Portland's Stormwater Management Manual for a list of approved technologies. New technologies must gain approval from the City of Portland before being proposed for use in Oregon City.

APPENDIX F

Maintenance Covenant and Access Easement

APPENDIX F. MAINTENANCE COVENANT AND ACCESS EASEMENT

In compliance with section 13.12.010 of the Oregon City Municipal Code. The city is required to establish maintenance easements with the owners of privately owned stormwater facilities to ensure an appropriate level of maintenance and to help minimize public safety hazards. The legal record owner of the land where a private storm facility is located must complete and execute the document contained in Appendix F to satisfy requirements of section 13.12.010 of the Oregon City Municipal Code.

"Maintenance" means any activity that is necessary to keep an existing stormwater facility in good working order so as to function as designed. Maintenance includes complete reconstruction of a stormwater facility, if needed to return the facility to good working order. Maintenance also includes the correction of any problem on the site property that may directly impact the function of the stormwater facilities.

"Maintenance easement" means a binding agreement between the city and the person or persons holding title to a property served by a stormwater facility where the property owner promises to maintain certain stormwater facilities; grants the city the right to enter the subject property to inspect and make certain repairs, or perform certain maintenance procedures on the stormwater control facilities when such repairs or maintenance have not been performed by the property owner; and promises to reimburse the city for the cost should the city perform such repairs or maintenance.

All maintenance covenants shall include specific operation and maintenance measures to ensure that the proposed stormwater quantity control facilities will be properly operated and maintained.

AFTER RECORDING RETURN TO:

City of Oregon City, City Recorder
P.O. Box 3040
Oregon City, Oregon 97045-0304

Planning File No.: _____

Tax Map & Lot: _____

GRANTOR: _____

MAINTENANCE AND ACCESS EASEMENT AGREEMENT FOR PRIVATELY-OWNED STORMWATER MANAGEMENT FACILITIES

This MAINTENANCE AND ACCESS EASEMENT AGREEMENT ("**Agreement**") is made between the CITY OF OREGON CITY, a municipal corporation of the State of Oregon formed pursuant to ORS Chapter 457 (the "**City**"), and _____ ("**Grantor**").

This Agreement runs with the land and is binding on Grantor and its successors and assigns, including subsequent purchasers of property within the Development (defined below).

RECITALS

A. Grantor is the owner of certain real property located in the City of Oregon City, Clackamas County, Oregon, legally described on **Exhibit A** attached hereto and commonly known as_____, the "**Development**".
Name of development, property address or tax lot

B. The following stormwater management facilities ("**Stormwater Facilities**") were constructed or will be constructed at the Development as further described below and depicted in **Exhibit B** (Site Plan, showing and identifying storm facilities):

Grantor's written description of each facility

C. The City has approved construction plans submitted by Grantor for the Development, including Stormwater Facilities as described above. The Stormwater Facilities are designed by a registered professional engineer to accommodate anticipated volume of runoff and to detain and treat runoff in accordance with City's Stormwater and Grading Design Standards and its amendments. The Stormwater Facilities enable development of property while mitigating the impacts of additional surface water and pollutants associated with stormwater runoff prior to discharge from the property to the public stormwater system.

D. Failure to inspect, maintain, repair, and replace the Stormwater Facilities after they are constructed can result in an unacceptable impact to the public stormwater system. To protect the owners of property within the Development, as well as owners of neighboring property, the City requires Grantor to enter into this Agreement as a condition to the City's approval of construction plans and building permit(s) for the Development. This Agreement confirms Grantor's, and Grantor's successors and assigns', obligation to inspect, maintain, repair, and replace the Stormwater Facilities. The term "**Owner(s)**" is used herein to refer to the owner or owners of any part of the Development on which Stormwater Facilities are located. "Owner(s)" include Grantor while Grantor owns any part of the Development on which Stormwater Facilities are located and includes any homeowners association owning common areas in the Development on which Stormwater Facilities are located.

E. In connection with its development of the Development, Grantor may divide the property within the Development into individual lots (each a "**Lot**" and collectively the "**Lots**"). The Stormwater Facilities for the Development will be maintained by the Owner(s). Therefore, although Grantor will be the sole owner responsible for constructing, inspecting, maintaining, repairing, and replacing the Stormwater Facilities while Grantor owns the entirety of the Development, upon Grantor's sale or transfer of ownership of any Lot, or part of the Development, those responsibilities will be transferred to the subsequent Owner(s).

F. The consideration for this Agreement is connection to the City's public stormwater system.

AGREEMENT

NOW, THEREFORE, for good and valuable consideration, the receipt and sufficiency of which are hereby acknowledged, the City and Grantor agree as follows:

1. **Incorporation of Recitals**. The Recitals to this Agreement are incorporated into and made a part of this Agreement.

2. **Run with the Land**. The parties' rights and obligations contained herein shall run with the land and shall be binding upon the Grantor and its successors and assigns (including, without limitation, the Owner(s) of the Lot(s) and any homeowner's association owning common areas in the Development). Those rights and obligations shall inure to the benefit of the City, as well as its successors and assigns.

3. **Agreement to Maintain and Repair**. The Owner(s) shall, at their sole expense, themselves or through qualified independent contractors, at all times during their ownership of the property within the Development maintain the Stormwater Facilities in good working order, condition and repair, clear of all debris, and in compliance with all applicable state and local rules, regulations, and guidelines (including those adopted from time to time by the City and including the City's Stormwater and Grading Design Standards) and the Operation and Maintenance Plan attached as **Exhibit C** of this Agreement.

4. **Agreement to Inspect.** The Owner(s) shall perform, at a minimum, annual inspections of all Stormwater Facilities covered by this agreement, per guidelines in **Exhibit C**, attached. The annual inspection required by this Agreement shall identify work necessary to repair or maintain facilities in good working order. The Owner(s) shall provide Oregon City Public Works Department with annual maintenance inspection reports, including identification of the corrective actions taken in response to the annual inspection. If needed, inspection forms can be obtained from the Oregon City Public Works Department.

5. **Easement.** Grantor hereby grants the City, its employees, independent contractors and designees, a nonexclusive easement for ingress and egress over, across and under the Development from time to time at the City's sole discretion to inspect, sample, and monitor components of the Stormwater Facilities and discharges therefrom. Grantor hereby grants to the City permission to undertake the actions described in Sections 6 and 7 of this Agreement. Grantor understands and agrees that this easement limits the ability of Grantor, its successors and assigns, including any Owner(s), from constructing any permanent buildings, structures, landscaping or other improvements that would interfere with the functioning of the Stormwater Facilities or the City's access to perform the inspection and maintenance required under this Agreement.

6. **Failure to Perform Agreement.** If the City, in its sole discretion, determines that the Owner(s) are not in compliance with the Agreement described in Sections 3 and 4, the City or its designee shall provide the non-complying Owner(s) written notice to perform the maintenance and/or repair work specified in the notice. Provided, however, no prior written notice shall be required in the case of an emergency, which shall be governed by Section 7. If such work is not performed to the City's satisfaction within seven (7) days after the date of such notice, or such other time as the City may, in its sole discretion, determine, the City, its employees, independent contractors and designees may exercise their rights under the Easement described in Section 5 of this Agreement to enter the Development to perform any and all work required bringing the Stormwater Facilities into compliance with this Agreement.

7. **Emergency**. If the City, in its sole discretion, determines that there exists or will likely exist an emergency on or about the Development with respect to the Stormwater Facilities, the City, its employees, independent contractors and designees may immediately exercise their rights under the Easement described in Section 5 of this Agreement to immediately enter the Development to perform any and all work required to bring the Stormwater Facilities into compliance with this Agreement, and in such case the City shall use reasonable efforts to notify the affected Owner(s) prior to entering the Development. Notwithstanding the above, the work performed may consist only of avoiding or mitigating the emergency and/or cleaning and/or repairing the Stormwater Facilities to their original condition and standards.

8. **City Under No Obligation.** The City, as well as its departments, employees, independent contractors and/or designees shall have no obligation to exercise its rights under this Agreement, including the right under Sections 6 and 7 of this Agreement, to perform the work required of the Owner(s), or to perform any other maintenance or repair of the stormwater facilities. In addition, neither the City, nor any of its departments, employees, independent contractors and/or designees shall have any liability to any Owner(s) in connection with the exercise or non-exercise of such rights, the maintenance or repair of the stormwater facilities, or the failure to perform the same.

9. **Grantor Obligations.** In addition to the agreement and easement described above, Grantor agrees to the following additional obligations:
   a. Prior to sale of any portion of the Development, Grantor shall provide to the City's Public Works Department, a copy of the Operations and Maintenance Manual for the Stormwater Facilities, which shall include detailed diagrams and descriptions identifying the components and operations of the Stormwater Facilities.
   b. Prior to final approval of the Development, this document shall be recorded in the deed records of Clackamas County.
   c. Grantor shall notify the City's Public Works Director in writing of any change in ownership, and the new Owner(s) shall become the "**Grantor Designee**". The Grantor Designee, its successors and assigns shall be bound with respect to the matters described in this Agreement including Grantor's obligations.
   d. Upon sale or transfer of the Development, or any portion thereof, Grantor shall inform the purchaser of the obligations required under this Agreement.

10. **Reimbursement**. If the City exercises its rights as described in Section 6 and Section 7 to perform compliance work and enters the Development pursuant to the Easement described in Section 5 of this Agreement, the Owner(s) shall reimburse the City for all its costs and expenses incurred in connection therewith within thirty (30) days after receipt of an invoice. If the Development is owned by more than one owner (i.e., multiple lot owners), for each property or Lot where the City exercises its rights as described in Section 6 and Section 7, the Owner(s) shall be severally liable for reimbursing the City for all its costs and expenses incurred in connection therewith within. If any of the Owner(s) fail to pay the invoiced amount within such period, such amount shall thereafter accrue interest at the statutory rate. Such amount, together with interest, shall be a lien on the Development (and each of the Lots within the Development) that may be foreclosed in accordance with ORS Chapter 88.

11. **Indemnification**. Owner(s) agrees to indemnify, defend (with legal counsel reasonably acceptable to the City), and hold harmless the City, its employees, independent contractors and designees harmless from and against any liability, losses, costs, expenses (including reasonable attorney fees), claims or suits arising from failure of the Owner(s) to perform its obligations under this Agreements or the exercise of the City's rights under this Agreement.

12. **Attorney Fees.** If legal action is commenced in connection with this Agreement, the prevailing party in such action shall be entitled to recover its reasonable attorney fees and costs incurred in the trial court and in the appeal therefrom. The term "action" shall be deemed to include action commenced in the bankruptcy courts of the United States and any other court of general or limited jurisdiction.

13. **Assignment**. The obligations of Grantor under this Agreement shall run with the land and therefore shall bind the purchasers of property within the Development without the necessity of any separate agreement evidencing or confirming the assignment and the purchaser's assumption of the obligations. The obligations may not be otherwise assigned except that the obligations may be assigned, with the prior written consent of the City, to a homeowner's association that owns and maintains the common areas of the Development.

14. **Authority.** If Grantor is an entity, the individual executing this Agreement on behalf of Grantor represents and warrants to the City that he or she has the full power and authority to do so and that Grantor has full right and authority to enter into this Agreement and perform its obligations under this Agreement.

IN WITNESS WHEREOF, the GRANTOR has executed this instrument this _____ day of _____, 20_____. The person(s) whose name(s) is/are subscribed to the within instrument acknowledge that he/she/they executed the instrument in his/her/their legally authorized capacity(ies), and that by his/her/their signature(s) on the instrument the person(s), or the entity upon behalf of which the person(s) acted, executed the instrument.

[Signature Page(s) Follow]

GRANTOR: _____

As shown on Page 1 (name of organization or individual property owner(s))

_____

Signature No. 1

_____, _____

Signer's printed name *Title (if applicable)*

_____

Signature No. 2

_____, _____

Signer's printed name *Title (if applicable)*

STATE OF OREGON)
)
County of _____)

This record was acknowledged before me on (month & day) _____, 20____

by _____, as _____

Signer's printed name *Title (write "N/A" if not applicable)*

of _____.

Name of Corporation on whose behalf record is executed (write "N/A" if not applicable)

Stamp notary seal:

WITNESS my hand and official seal.

_____

Signature of Notary Public

My commission expires:_____

Accepted on behalf of the City of Oregon City:

_____ _____

By: Anthony J. Konkol III, City Manager By: John M. Lewis, Public Works Director

_____

Attest: Kattie Riggs, City Recorder

Insert exhibits on separate subsequent sheets.

Exhibit A is a legal description of the subject property provided by a professional land surveyor, stamped with their seal, and having a 1/8th-inch or larger font size (8.5-inch by 11-inch page).

Exhibit B is a site plan having a 1/8th-inch or larger font size (8.5-inch by 11-inch page is preferred).

Exhibit C is an operation and maintenance plan having a 1/8th-inch or larger font size (8.5-inch by 11-inch page).

NOTE:

Please remit the required processing and recording fee with this document submittal.

Photostatic copies of reduced tax maps may not meet the above described map requirements – verify with the Clackamas County Recorder.

All pertinent documents must be approved and processed by the City of Oregon City prior to the recording of partition & subdivision plats by the Clackamas County Surveyors Office – allow ample time for the City to process this document.

OREGON CITY

Public Works – Engineering

625 Center Street | Oregon City OR 97045
Ph (503) 657-0891 | Fax (503) 657-7892

Public Stormwater Facility
Temporary Maintenance Contract

Project #: _____ Date: _____
Project Name: _____ Developer: _____

As a condition of approval of the above referenced development, the public stormwater management facility plantings must be permanently established to assure the facility will function properly in perpetuity. Pursuant to City's initial acceptance for ownership of public facilities, the developer is responsible for maintaining components of the facility per the standards in Exhibit A during the two-year warranty period. After successful completion of the developer's two-year maintenance obligation (and any subsequent extensions required due to plant loss or poor maintenance), facility will be accepted for final ownership and operation by the City, and developer will be released of maintenance obligation.

Option A – Developer Obligation: Per Oregon City Municipal Code Section 13.12.140.B, to ensure that the facility's maintenance is performed properly and regularly throughout the maintenance period, the developer shall provide **cash** surety for 110% of the facility landscaping cost, per Exhibit B. The facility will be subject to inspection by City personnel to ensure maintenance standards and schedules are followed. If City determines that the facility is not being adequately maintained, City shall notify developer of deficiencies. Developer shall have 7 days to perform maintenance and repair of the facility in an approved manner, unless a greater time period is specified by City. If developer fails to perform the required maintenance within the given time period, City may take all necessary actions to remedy the deficiencies, including Code Enforcement action and/or forfeiture of surety in full.

Temporary irrigation is required. If the developer chooses to use a temporary onsite irrigation system, the developer shall pay the cost of the meter and backflow assembly as well as any backflow testing required.

☐ *Option A* *Surety Amount:* _____
Meter Charge: _____

625 Center Street | Oregon City OR 97045
Ph (503) 657-0891 | Fax (503) 657-7892

Option B – City Obligation: Developer may opt to pay City to perform required maintenance for the two-year warranty period per Exhibit B. The City, utilizing City personnel or contractor of its own choosing, agrees to perform maintenance in accordance with standards in Exhibit A. Within 90 days of start of contract under *Option B*, if City discovers dead, diseased, or otherwise unsuitable plant material, City shall notify developer of details of failed materials and cost of replacement. Developer shall provide funds to City to remove and replace said material within 30 days of notice. These funds shall be separate from the maintenance funds. Planted tract(s) shall be under City ownership prior to commencement of maintenance under *Option B – City Obligation.*

☐ *Option B Fee* *Meter Charge:* _____

Landscape Maintenance Fee: _____

Total: _____

All required plantings in the maintenance area shall be installed **prior to commencement of this contract**; no plantings to be deferred.

Developer maintains responsibility for piping and structures; irrigation repairs, winterization, and water usage costs throughout the maintenance period.

The term of this agreement is two years beginning _____ and ending _____, or as extended per determination of City Engineer.

_____ _____

Josh Wheeler, PE *Date*
Assistant City Engineer, City of Oregon City

_____ _____

Developer *Date*
Name: _____
Company: _____
Address: _____
_____
Email: _____
Phone: _____

OREGON CITY

Public Works – Engineering

625 Center Street | Oregon City OR 97045
Ph (503) 657-0891 | Fax (503) 657-7892

Public Stormwater Facility Temporary Maintenance Contract

Exhibit A – Minimum Maintenance Standards

TASK	PERFORMANCE STANDARD	FREQUENCY	BY DATE
Mulch	Mulch to minimum 3" thickness	Annual	3/01 - 4/30
Irrigation	Winterize system	Annual	11/01
	Activate system	Annual	5/01
Weeds	Site to be maintained in weed free condition	Continual	
	Manual weed removal to be used where feasible. Spot spraying is allowed elsewhere. **Herbicides are prohibited in stormwater treatment area.**	Only as needed	
Invasive Plants	Remove blackberry, tansy, scotch broom, others as identified		
Mowing	Maintain grass at 3" – 6" height, except treatment area, by mowing or string trimming	Weekly As needed	
	Excess clippings to be removed and disposed of		
Edging	Grass areas adjacent to curb, sidewalk, other concrete surfaces	As needed	
Tree and Shrub Care	Trees overhanging parking lots or roadways trimmed to vertical clearance of 14'	As needed	
	Trees overhanging sidewalks or property lines trimmed to a vertical clearance of 9'	As needed	
	Shrubs maintained to a horizontal clearance of 4" from edge of curb, paved area, sidewalk or property line	As needed	
	Replant dead or diseased plant material per original plan or approved substitute	As needed	
Litter	Keep facility litter free. Remove and dispose of all observed litter from ground surfaces and structures such as inlet/outlet grates	As needed	
Leaves	Prevent excessive build up of leaves in facility. Remove and dispose of leaves from ground surfaces and structures such as inlet/outlet grates	As needed	
Erosion	Fill, lightly compact, and revegetate bare soil areas	As needed	

OREGON CITY

Public Works – Engineering

625 Center Street | Oregon City OR 97045
Ph (503) 657-0891 | Fax (503) 657-7892

Public Stormwater Facility Temporary Maintenance Contract
Exhibit B – Fee Calculation

☐ Option A - Surety (Developer Obligation):

Cash Surety: Landscaping estimate or actual cost: $_____ x 110% = $_____=_____
Meter Charge: _____

☐ Option B - Fee (City Obligation):

Meter Charge: _____
Maintenance fee: _____

Total : _____ (minimum fee $250)

OREGON CITY

Public Works – Engineering

625 Center Street | Oregon City OR 97045
Ph (503) 657-0891 | Fax (503) 657-7892

Public Stormwater Facility Temporary Maintenance Contract
Exhibit C.1 Landscape Plan

625 Center Street | Oregon City OR 97045
Ph (503) 657-0891 | Fax (503) 657-7892

Public Stormwater Facility Temporary Maintenance Contract
Exhibit D –Location Diagram

OREGON CITY

Public Works – Engineering

625 Center Street | Oregon City OR 97045
Ph (503) 657-0891 | Fax (503) 657-7892

Public Stormwater Facility Temporary Maintenance Contract
Exhibit E – Municipal Code

13.12.140 - Maintenance of public stormwater facilities.

A. A stormwater facility that receives stormwater runoff from a public right-of-way shall be a public facility. Upon expiration of the warranty period and acceptance by the city as described below, the city shall be responsible for maintenance of those public stormwater facilities. Access for maintenance of the stormwater facilities shall be provided to the city through the granting of a stormwater easement or other means acceptable to the city.

B. Responsibility for maintenance of stormwater facilities including all landscaping, irrigation systems, structures and appurtenances shall remain with the property owner/developer for two years (known as the warranty period). The owner/developer shall provide the city a separate two-year landscaping maintenance bond for one hundred ten percent of the landscaping cost. Transfer of maintenance of stormwater conveyance systems shall occur when the city accepts the stormwater conveyance system.

C. The city will perform an inspection of the development's entire publicly maintained stormwater system approximately forty-five days before the two-year warranty period expires. The stormwater system must be found to be in a clean, functional condition by the city engineer before acceptance of maintenance responsibility by the city.

(Ord. No. 15-1006, § 1(Exh. A), 5-20-2015)

Stormwater and Grading Design Standards

APPENDIX G

1851 Vegetation Conditions

1851 Vegetation

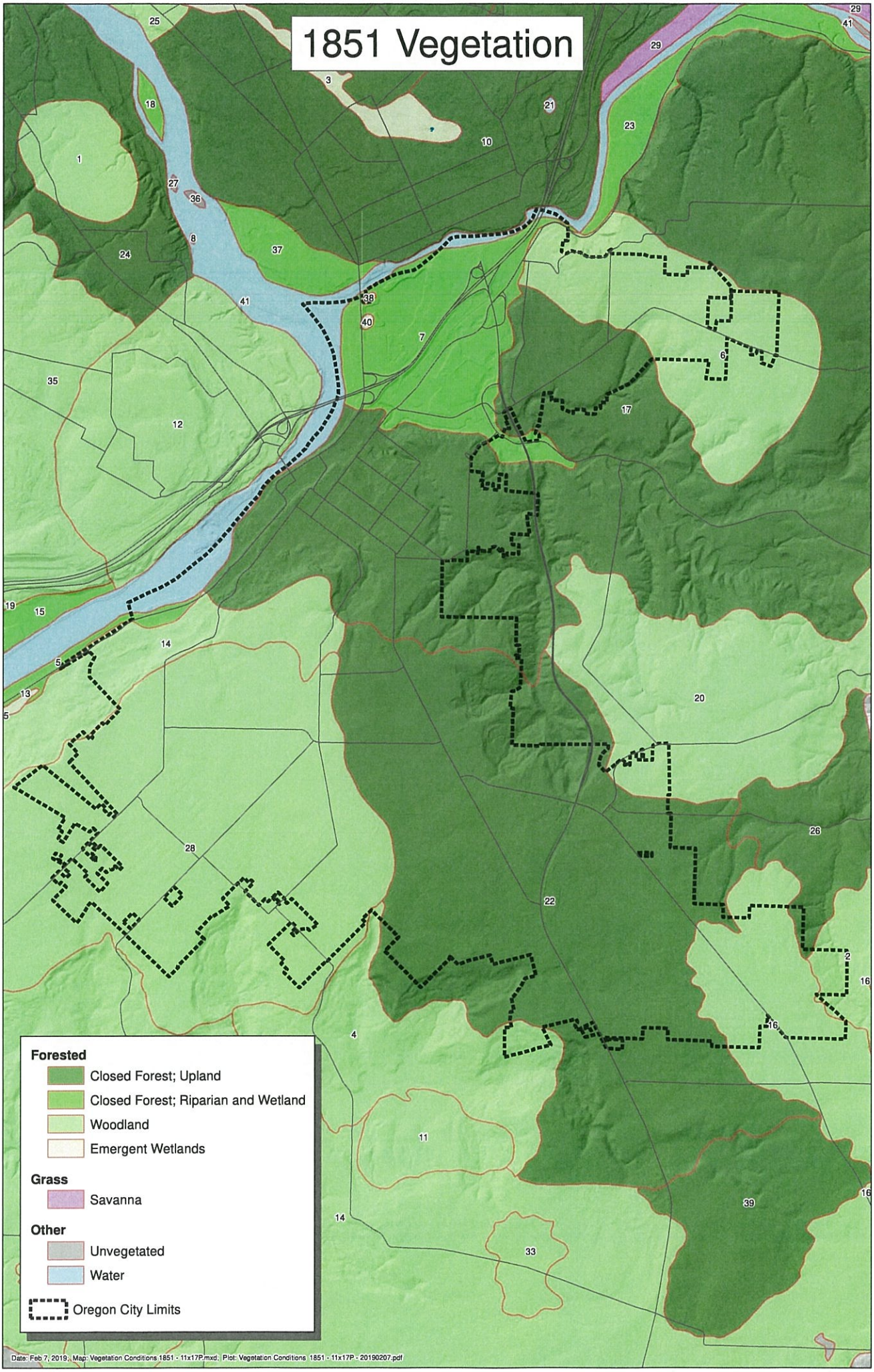

Stormwater and Grading Design Standards

APPENDIX H

Hydrograph Method Guidelines

APPENDIX H. HYDROGRAPH METHOD GUIDELINES

The Santa Barbara Urban Hydrograph (SBUH) method was developed by the Santa Barbara County Flood Control and Water Conservation District to determine a runoff hydrograph for an urbanized area. It is a simpler method than some other approaches, as it computes a hydrograph directly without going through intermediate steps (i.e., a unit hydrograph) to determine the runoff hydrograph.

The SBUH method is a popular method for calculating runoff, since it can be done with a spreadsheet or by hand relatively easily. The SBUH method can be used to calculate peak flows and runoff volumes for sizing conveyance systems or stormwater management facilities when flow-duration matching is not required.

Elements of the SBUH Method

The SBUH method depends on several variables:

- Design storm
- Pervious (A_p) and impervious (A_{imp}) land areas
- Time of concentration (Tc) calculations
- Runoff curve numbers (CN) applicable to the site

These elements shall all be presented as part of the submittal process. In addition, maps showing the pre-development and post-development conditions shall be presented to help in the review.

Design Storm

The SBUH method also requires a design storm to perform the runoff calculations. Oregon City uses a NRCS Type 1A 24-hour storm distribution. This storm is shown in **Figure H-1** at the end of this appendix. The depth of rainfall for the water quality design storm shall be 1.0 inches[1] in 24 hours. The depth of rainfall for the 2 through 100-year 24-hour storm events is shown below in **Table H-1.**

Table H-1. 24-hour Rainfall Depths in Oregon City

Recurrence Interval, Years	24-Hour Depth, Inches
2	2.8
10	3.5
25	4.0
50	4.4
100	4.5

Source: NOAA Atlas 2, Volume X

[1] The water quality design storm rainfall depth as documented in a technical memorandum: *Selection of Representative Rainfall Volume and Rainfall Intensities to result in Capture and Treatment of 80% of the Average Annual Runoff Volume*, Brown and Caldwell, May 11, 2010.

Land Area

The total area, including the pervious and impervious areas within a drainage basin, shall be quantified in order to evaluate critical contributing areas and the resulting site runoff. Each area within a basin shall be analyzed separately and their hydrographs combined to determine the total basin hydrograph. Areas shall be selected to represent homogenous land use/development units.

Time of Concentration

Time of concentration, Tc, is the time for a theoretical drop of water to travel from the furthest point in the drainage basin to the facility being designed. (In this case, Tc is derived by calculating the overland flow time of concentration and the channelized flow time of concentration.) Tc depends on several factors, including ground slope, ground roughness, and distance of flow. The following formula may be used for determining Tc.

$Tc = Tt_1 + Tc_2 + Tc_3 + \ldots + T_{cn}$

$Tt = L/60V$ (Conversion of velocity to travel time)

$Tt = \frac{0.42\,(nL)^{0.8}}{1.58(s)^{0.4}}$ (Manning's kinematic solution for sheet flow less than 300 feet)

For shallow concentrated flow across slopes less than 0.005 ft/ft:

$V = 16.1345(s)^{0.5}$ (Unpaved surfaces)

$V = 20.3282(s)^{0.5}$ (Paved surfaces)

Where,

T_t = travel time, minutes

T_c = total time of concentration, minutes (minimum T_c = 5 minutes)

L = flow length, feet

V = average velocity of flow, feet per second

n = Manning's roughness coefficient for various surfaces

s = slope of the hydraulic grade line (land or watercourse slope), feet per foot

When calculating T_c, the following limitations apply:

- Overland sheet flow (flow across flat areas that does not form into channels or rivulets) shall not extend for more than 300 feet.
- For flow paths through closed conveyance facilities such as pipes and culverts, standard hydraulic formulas shall be used for establishing velocity and travel time.
- Flow paths through lakes or wetlands may be assumed to be zero (i.e., T_c = 0).

Runoff Curve Numbers

Runoff curve numbers (CNs) were developed by the Natural Resources Conservation Service (NRCS) after studying the runoff characteristics of various types of land. CNs were developed to reduce diverse characteristics such as soil type, land usage, and vegetation into a single variable for doing runoff calculations. The runoff curve numbers approved for stormwater quantity/quality calculations are included as **Tables H-2 and H-3** of this appendix.

The curve numbers presented in **Tables H-2 and H-3** are for wet antecedent moisture conditions. Wet conditions assume previous rainstorms have reduced the capacity of soil to absorb water. Given the frequency of rainstorms in the Portland area, wet conditions are most likely, and give conservative hydrographic values.

Hydrologic Soil Group descriptions, critical to determining the appropriate curve numbers are included in **Table H-4**.

Table H-2. Runoff Curve Numbers for Urban Areas*

Cover Descriptions	Average Percent Impervious Area	Curve Numbers for Hydrologic Soil Group			
Cover Type and Hydrologic Condition		A	B	C	D
Open space (lawns, parks, golf courses, cemeteries, etc.)					
Poor condition (grass cover <50%)		68	79	86	89
Fair condition (grass cover 50% to 75%)		49	69	79	84
Good condition (grass cover > 75%)		39	61	74	80
Impervious areas					
Paved parking lots, roofs, driveways, etc. (excluding right-of-way)		98	98	98	98
Streets and roads					
Paved: curbs and stone sewers (excluding right-of-way)		98	98	98	98
Paved: open ditches (including right-of-way)		83	89	92	93
Gravel (including right-of-way)		76	85	89	91
Dirt (including right-of-way)		72	82	87	89
Urban districts					
Commercial and business	85	89	92	94	95
Industrial	72	81	88	91	93
Residential districts by average lot size					
1/8 acre or less (town houses)	65	77	85	90	92
1/4 acre	38	61	75	83	87
1/3 acre	30	57	72	81	86
1/2 acre	25	54	70	80	85
1 acre	20	51	68	79	84
2 acres	12	46	65	77	82

**Soil Conservation Service, Urban Hydrology for Small Watersheds, Technical Release 55, pp. 2.5-2.8, June 1986.*

Table H-3. Runoff Curve Numbers for Other Agricultural Areas*

Cover description		Curve numbers for hydrologic soil group			
Cover type	Hydrologic condition	A	B	C	D
Pasture, grassland, or range-continuous forage for grazing					
<50% ground cover or heavily grazed with no mulch	Poor	68	79	86	89
50 to 75% ground cover and not heavily grazed	Fair	49	69	79	84
>75% ground cover and lightly or only occasionally grazed	Good	39	61	74	80
Meadow-continuous grass, protected from grazing and generally mowed for hay	-	30	58	71	78
Brush--weed-grass mixture with brush as the major element					
<50% ground cover	Poor	48	67	77	83
50 to 75% ground cover	Fair	35	56	70	77
>75% ground cover	Good	30	48	65	73
Woods-grass combination (orchard or tree farm)	Poor	57	73	82	86
	Fair	43	65	76	82
	Good	32	58	72	79
Cover type	Hydrologic condition	A	B	C	D
Woods					
Forest litter, small trees, and brush are destroyed by heavy grazing or regular burning.	Poor	45	66	77	83
Woods are grazed but not burned, and some forest litter covers the soil.	Fair	36	60	73	79
Woods are protected from grazing, and litter and brush adequately cover the soil.	Good	30	55	70	77

*Soil Conservation Service, *Urban Hydrology for Small Watersheds*, Technical Release 55, pp. 2.5-2.8, June 1986.

Table H-4. NRCS Hydrologic Soil Group Descriptions

NRCS Hydrologic Soil Group	Description
Group A	Soils having a high infiltration rate (low runoff potential) when thoroughly wet. These consist chiefly of deep, well drained to excessively drained sands or gravels. These soils have a high rate of water transmission.
Group B	Soils having a moderate infiltration rate when thoroughly wet. These consist chiefly of moderately deep or deep, moderately well drained or well drained soils that have moderately fine texture to moderately coarse texture. These soils have a moderate rate of water transmission.
Group C	Soils having a slow infiltration rate when thoroughly wet. These consist chiefly of soils that have a layer that impedes the downward movement of water or soils that have moderately fine texture or fine texture. These soils have a slow rate of water transmission.
Group D	Soils having a very slow infiltration rate (high runoff potential) when thoroughly wet. These consist chiefly of clay soils that have a high shrink-swell potential, soils that have a permanent high water table, soils that have a fragipan or clay layer at or near the surface, and soils that are shallow over nearly impervious material. These soils have a very slow rate of water transmission.

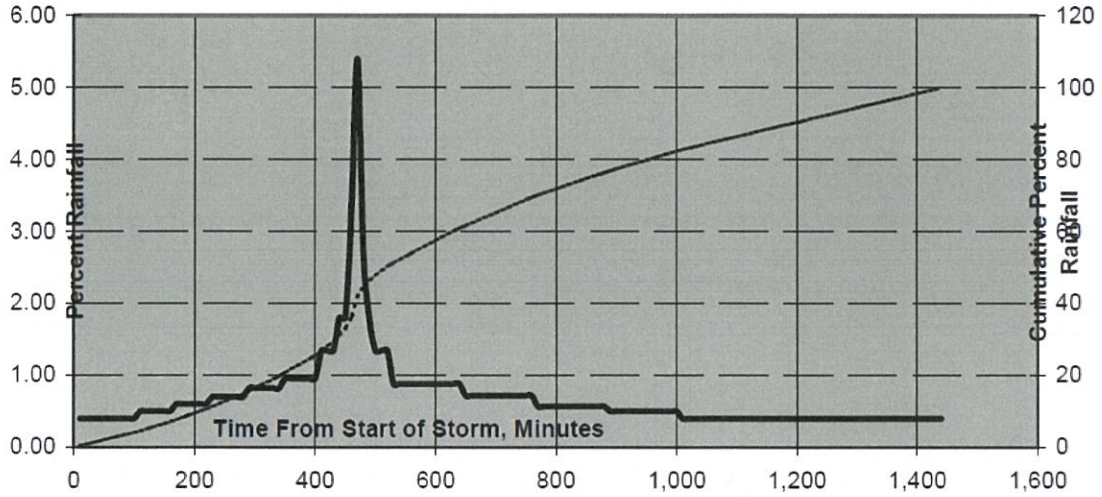

Time From Start of Storm, Minutes	% Rainfall	Cumulative % Rainfall	Time From Start of Storm, Minutes	% Rainfall	Cumulative % Rainfall	Time From Start of Storm, Minutes	% Rainfall	Cumulative % Rainfall	Time From Start of Storm, Minutes	% Rainfall	Cumulative % Rainfall
0 - 10	0.40	0.40	360 - 370	0.95	22.57	720 - 730	0.72	67.40	1080 - 1090	0.40	86.00
10 - 20	0.40	0.80	370 - 380	0.95	23.52	730 - 740	0.72	68.12	1090 - 1100	0.40	86.40
20 - 30	0.40	1.20	380 - 390	0.95	24.47	740 - 750	0.72	68.84	1100 - 1110	0.40	86.80
30 - 40	0.40	1.60	390 - 400	0.95	25.42	750 - 760	0.72	69.56	1110 - 1120	0.40	87.20
40 - 50	0.40	2.00	400 - 410	1.34	26.76	760 - 770	0.57	70.13	1120 - 1130	0.40	87.60
50 - 60	0.40	2.40	410 - 420	1.34	28.10	770 - 780	0.57	70.70	1130 - 1140	0.40	88.00
60 - 70	0.40	2.80	420 - 430	1.34	29.44	780 - 790	0.57	71.27	1140 - 1150	0.40	88.40
70 - 80	0.40	3.20	430 - 440	1.80	31.24	790 - 800	0.57	71.84	1150 - 1160	0.40	88.80
80 - 90	0.40	3.60	440 - 450	1.80	33.04	800 - 810	0.57	72.41	1160 - 1170	0.40	89.20
90 - 100	0.40	4.00	450 - 460	3.40	36.44	810 - 820	0.57	72.98	1170 - 1180	0.40	89.60
100 - 110	0.50	4.50	460 - 470	5.40	41.84	820 - 830	0.57	73.55	1180 - 1190	0.40	90.00
110 - 120	0.50	5.00	470 - 480	2.70	44.54	830 - 840	0.57	74.12	1190 - 1200	0.40	90.40
120 - 130	0.50	5.50	480 - 490	1.80	46.34	840 - 850	0.57	74.69	1200 - 1210	0.40	90.80
130 - 140	0.50	6.00	490 - 500	1.34	47.68	850 - 860	0.57	75.26	1210 - 1220	0.40	91.20
140 - 150	0.50	6.50	500 - 510	1.34	49.02	860 - 870	0.57	75.83	1220 - 1230	0.40	91.60
150 - 160	0.50	7.00	510 - 520	1.34	50.36	870 - 880	0.57	76.40	1230 - 1240	0.40	92.00
160 - 170	0.60	7.60	520 - 530	0.88	51.24	880 - 890	0.50	76.90	1240 - 1250	0.40	92.40
170 - 180	0.60	8.20	530 - 540	0.88	52.12	890 - 900	0.50	77.40	1250 - 1260	0.40	92.80
180 - 190	0.60	8.80	540 - 550	0.88	53.00	900 - 910	0.50	77.90	1260 - 1270	0.40	93.20
190 - 200	0.60	9.40	550 - 560	0.88	53.88	910 - 920	0.50	78.40	1270 - 1280	0.40	93.60
200 - 210	0.60	10.00	560 - 570	0.88	54.76	920 - 930	0.50	78.90	1280 - 1290	0.40	94.00
210 - 220	0.60	10.60	570 - 580	0.88	55.64	930 - 940	0.50	79.40	1290 - 1300	0.40	94.40
220 - 230	0.70	11.30	580 - 590	0.88	56.52	940 - 950	0.50	79.90	1300 - 1310	0.40	94.80
230 - 240	0.70	12.00	590 - 600	0.88	57.40	950 - 960	0.50	80.40	1310 - 1320	0.40	95.20
240 - 250	0.70	12.70	600 - 610	0.88	58.28	960 - 970	0.50	80.90	1320 - 1330	0.40	95.60
250 - 260	0.70	13.40	610 - 620	0.88	59.16	970 - 980	0.50	81.40	1330 - 1340	0.40	96.00
260 - 270	0.70	14.10	620 - 630	0.88	60.04	980 - 990	0.50	81.90	1340 - 1350	0.40	96.40
270 - 280	0.70	14.80	630 - 640	0.88	60.92	990 - 1000	0.50	82.40	1350 - 1360	0.40	96.80
280 - 290	0.82	15.62	640 - 650	0.72	61.64	1000 - 1010	0.40	82.80	1360 - 1370	0.40	97.20
290 - 300	0.82	16.44	650 - 660	0.72	62.36	1010 - 1020	0.40	83.20	1370 - 1380	0.40	97.60
300 - 310	0.82	17.26	660 - 670	0.72	63.08	1020 - 1030	0.40	83.60	1380 - 1390	0.40	98.00
310 - 320	0.82	18.08	670 - 680	0.72	63.80	1030 - 1040	0.40	84.00	1390 - 1400	0.40	98.40
320 - 330	0.82	18.90	680 - 690	0.72	64.52	1040 - 1050	0.40	84.40	1400 - 1410	0.40	98.80
330 - 340	0.82	19.72	690 - 700	0.72	65.24	1050 - 1060	0.40	84.80	1410 - 1420	0.40	99.20
340 - 350	0.95	20.67	700 - 710	0.72	65.96	1060 - 1070	0.40	85.20	1420 - 1430	0.40	99.60
350 - 360	0.95	21.62	710 - 720	0.72	66.68	1070 - 1080	0.40	85.60	1430 - 1440	0.40	100.00

Figure H-1. NRCS 24-Hour Type 1A Hyetograph